60V 46cm Push Lawnmower - 2514507AU

Item	Part No.	Description
1.1	JMGW278	Key assembly
2	JMGW051	Side discharge chute
3	JMGW281	Mulching plug
4	JMGW270	Rear flap assembly kit
5	JMGW282	Blade fan assembly
6	JMGW187	Bar blade
7	JMGW279	Blade bolt assembly
8	JMGW268	Side discharge cover assembly
9	JMGW283	8" front wheel assembly
10	JMGW273	10" rear wheel assembly
11	JMGW271	Nut
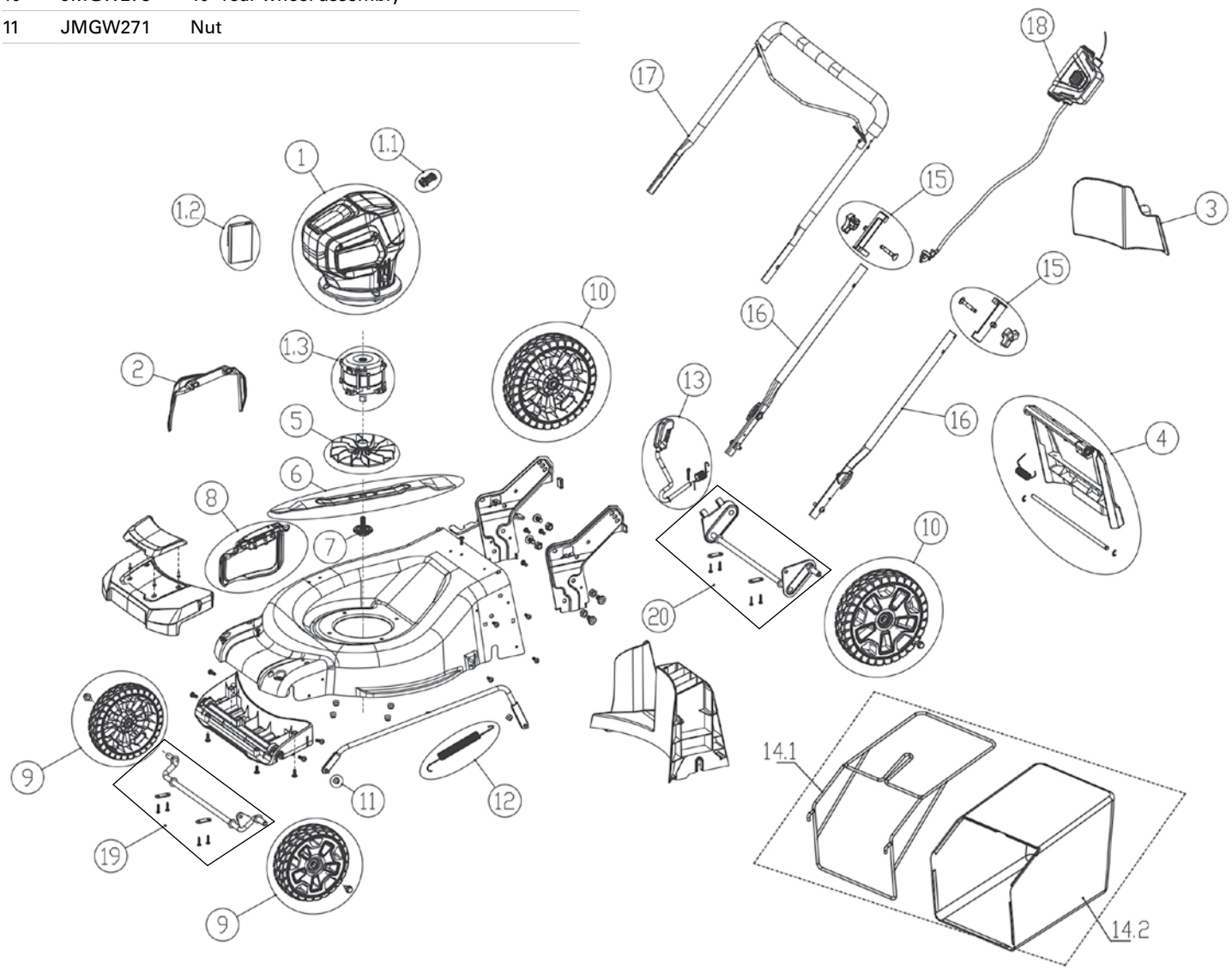
Item	Part No.	Description
12	JMGW272	Height adjustment tension spring
13	JMGW269	Height adjustment lever assembly
14.1	JMGW264	Grass catcher bag frame
14.2	JMGW265	Grass catcher bag
15	JMGW276	Push handle knob assembly
17	JMGW266	Upper handle kit
18	JMGW267	Power box assembly
19	JMGW274	Front Axle
20	JMGW275	Rear Axle