P0805062-00

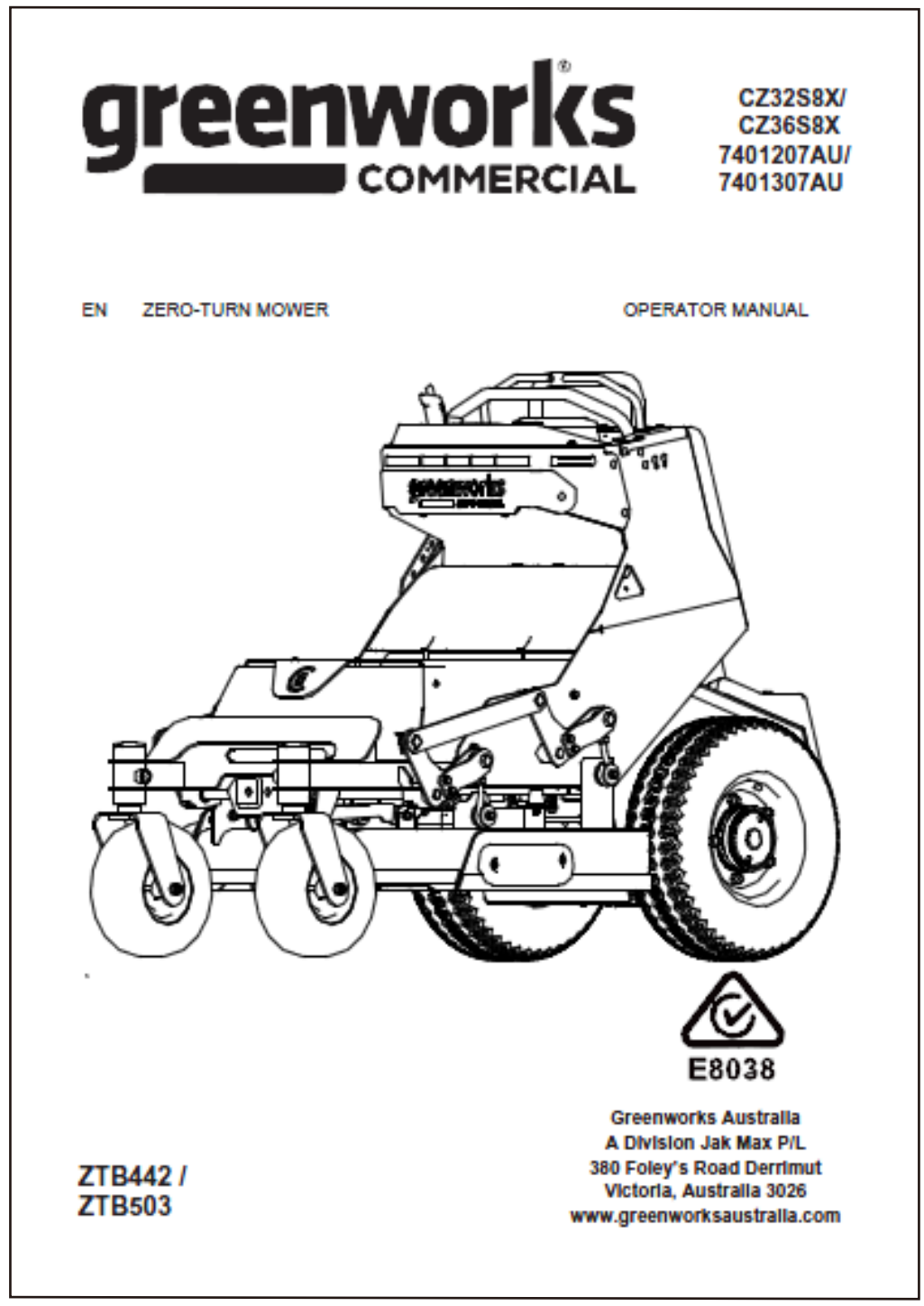

210

145

COLOR
■ K

技术要求：

1.材质要求：60g双胶纸，85%本白；
2.56P，内容见电子档；
3.单黑印刷，要求无色差、无污点；
4.骑马钉，裁切均匀、无连页；
5.以封样为准。
6.料件需符合格力博HSF文件(编号：GLB-CGR-146) 里关于环保和有害物质的具体要求。

版 本 号	B
重要度等级	B
是否专业款	否

标记	处数	更改文件号	签名	日期

设计	杨媛	标准化	向叶春
校对	陈丽	审定	
审核	周艳	批准	李金涛
工艺		日期	230525

说明书

阶段标记			视角标记	重量	比例
S	A	B			

共 1 张　第 1 张

常州格力博集团

GC 82V Zero Turn Mower

74001207AU/7401307AU

ERP号 P0805062-00

greenworks COMMERCIAL

CZ32S8X/
CZ36S8X
7401207AU/
7401307AU

EN ZERO-TURN MOWER OPERATOR MANUAL

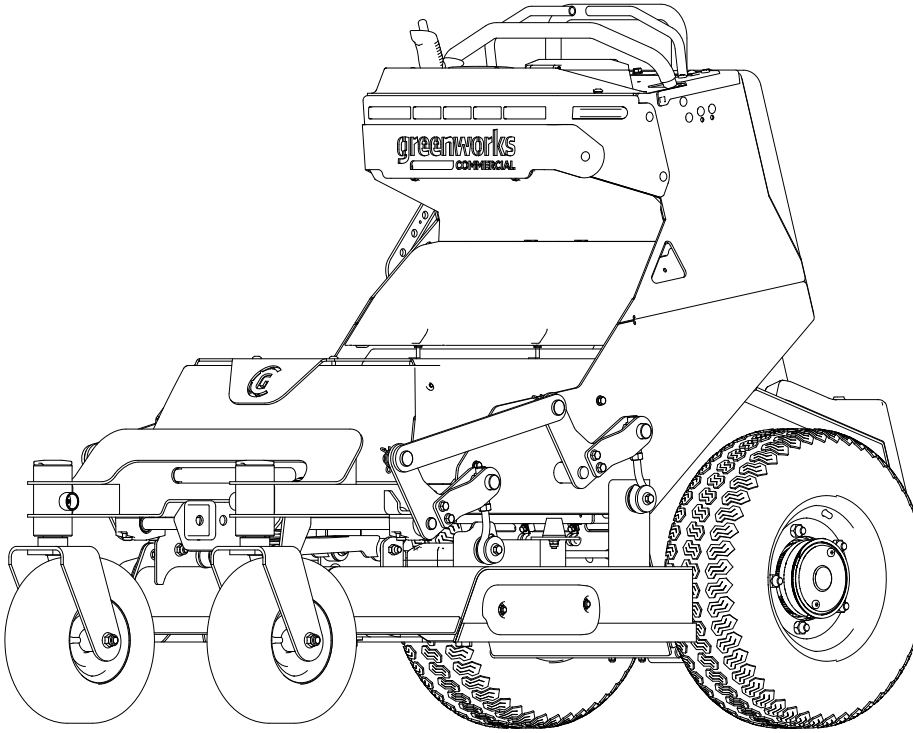

E8038

Greenworks Australia
A Division Jak Max P/L
380 Foley's Road Derrimut
Victoria, Australia 3026
www.greenworksaustralia.com

ZTB442 /
ZTB503

Vehicle matching label for customer to connect phone to the vehicle via APP
(including QR code, paring code and serial number)

1 Description....4
1.1 General information....4
1.2 Overview....5
2 General machine safety warnings....5
2.1 Work area safety....6
2.2 Electrical safety....6
2.3 Personal safety....6
2.4 Machine use and care....6
2.5 Battery tool use and care....7
2.6 Service....7
3 Lawn mower safety warnings....7
4 Safe practices for stand-on mowers....8
4.1 General information....8
4.2 Preparation before operating....8
4.3 Operating....8
4.4 Children specific....8
4.5 Slope specific....9
4.6 Hauling....9
4.7 Towing....9
4.8 Service....9
5 Symbols on the product....9
6 Risk levels....11
7 Recycle....12
8 Know your machine....12
8.1 Control panel....12
8.2 Steering control levers....12
8.3 Safety start interlock system....13
8.4 Electric take off (ETO) socket for connecting accessories....13
9 Operation....13
9.1 Before operation....13
9.2 Operate the machine....14
9.3 Slope operation....15
10 Operation suggestions....15
11 Electrical system....17
11.1 Electrical system safety....17
11.2 Electrical system information....17
11.3 Battery and charger....17
11.4 Digital display....18
12 App operation tips....22
12.1 Registration and Login....22
13 Errors....23
13.1 Display screen error code....23
13.2 BMS Error code....24
13.3 Battery charger error code....27
13.4 Right wheel motor controller error code....28
13.5 Left wheel motor controller error code....35
13.6 Left blade motor controller error code....41
13.7 Middle blade motor controller error code....43
13.8 Right blade motor controller error code....45
14 Maintenance....46
14.1 Mower blade maintenance....46
14.2 Tires....47
14.3 Torque values....47
14.4 Battery pack maintenance and storage....47
14.5 Service....48
15 Transportation and storage....49
15.1 Transporting the lithium-Ion batteries....49
15.2 Transporting the machine....49
15.3 Cleaning and storage....50
16 Troubleshooting....51
17 Technical data....52
18 Limited warranty....52
18.1 What is covered by this warranty....52
18.2 Who must perform the warranty service....53
18.3 What is not covered by this warranty....53
18.4 Disclaimer of warranty....53
18.5 Limitation of remedies....54
18.6 Time limit....54
18.7 No other warranties....54
18.8 Owner's responsibility....54
18.9 Allocation of risks....54
18.10 Warranty registration....54
18.11 Warranty registration form....55

1 DESCRIPTION

1.1 GENERAL INFORMATION

This manual applies to the following greenworkscommercial lines: 7401207AU(CZ32S8X) / 7401307AU(CZ36S8X).

1.1.1 TO THE NEW OWNER

The purpose of this manual is to assist owners and operators in maintaining and operating this greenworkscommercial mower. Please read the entire manual carefully; the information and instructions provided can help you achieve years of dependable machine performance.

It is the owner's responsibility to make certain that the operators and mechanics read and understand this manual and all decals before operating this machine. It is also the owner's responsibility to make certain that the operators and mechanics are qualified and physically able to operate this equipment. All operators and mechanics must become familiar with the safe operation of this equipment, its controls and safety signs.

Never let children or untrained people operate or service this equipment. Please note that local regulations may restrict the age of the operator.

1.1.2 USE THIS MANUAL

General operation, adjustment and maintenance guidance is outlined for both the experienced and novice greenworkscommercial mower user. Operating conditions vary considerably and cannot all be addressed individually. Through experience, however, operators should have no difficulty developing good operating skills suitable to most conditions.

Directions used in this manual (e.g., "RIGHT" or "LEFT") refer to directions from the perspective of the operator when using the machine (seated on the mower or standing facing forward), unless otherwise stated.

Photographs and illustrations used were current at the time of printing, but subsequent production changes may cause your machine to vary slightly in detail. greenworkscommercial products reserves the right to redesign and change the machine as deemed necessary, without notification. If a change has been made to your machine which is not reflected in this operator manual or the parts manual, see your greenworkscommercial products dealer for current information and parts.

1.1.3 WARRANTY REGISTRATION

The owner must register the unit by filling out the Warranty Registration Form, provided in the owner's packet, to validate warranty protection. As the new equipment owner, you are expected to see that this is done at the time of delivery. If using the Warranty Registration Form, it MUST be completed and signed by the authorized dealer and original purchaser. Be sure to register the mower plus each attachment that displays a model and serial identification number with greenworkscommercial.

⚠ WARNING

Any unauthorized modification, alteration, or use of non-approved attachments voids the warranty and releases greenworkscommercial from any liability arising from subsequent use of this equipment.

1.1.4 SERIAL NUMBER

The mower serial number is found on the date label. The serial number and model are required on the Warranty Registration Form. They will also ensure that you receive the correct parts when replacement becomes necessary.

1.1.5 PARTS AND SERVICE

All warranty repair and service must be handled through an authorized greenworkscommercial products dealer. Arrangements should be made through your local service center.

Have your stand-on lawn mower serviced by a qualified repair person using only identical replacement parts. This will ensure that the safety of the stand-on lawn mower is maintained.

1.2 OVERVIEW

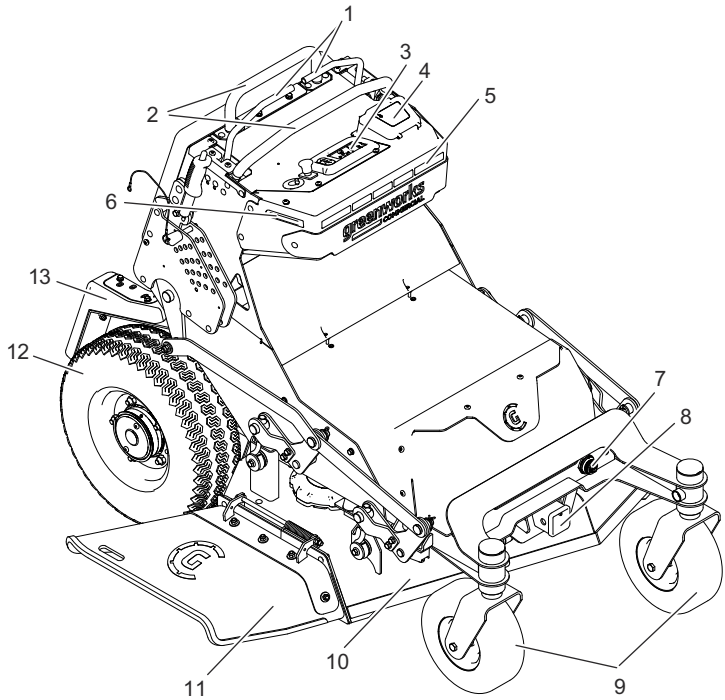

1	Steering control levers
2	Hand stabilizer bars
3	Control panel
4	USB port
5	LED light
6	Warning light
7	ETO socket
8	Attachment port
9	Front caster wheels
10	Deck
11	Discharge chute
12	Drive wheel
13	Foot pad

2 GENERAL MACHINE SAFETY WARNINGS

⚠ WARNING

Read all safety warnings, instructions, illustrations and specifications provided with this machine. *Failure to follow all instructions listed below may result in electric shock, fire and/or serious injury.*

Save all warnings and instructions for future reference.

The term "machine" in the warnings refers to your mains-operated (corded) machine or battery-operated (cordless) machine.

2.1 WORK AREA SAFETY

- **Keep work area clean and well lit.** *Cluttered or dark areas invite accidents.*
- **Do not operate the machine in explosive atmospheres, such as in the presence of flammable liquids, gases or dust.** *The machine create sparks which may ignite the dust or fumes.*
- **Keep children and bystanders away while operating the machine.** *Distractions can cause you to lose control.*

2.2 ELECTRICAL SAFETY

- **Machine plugs must match the outlet. Never modify the plug in any way. Do not use any adapter plugs with earthed (grounded) machine.** *Unmodified plugs and matching outlets will reduce risk of electric shock.*
- **Avoid body contact with earthed or grounded surfaces, such as pipes, radiators, ranges and refrigerators.** *There is an increased risk of electric shock if your body is earthed or grounded.*
- **Do not expose the machine to rain or wet conditions.** *Water entering a machine will increase the risk of electric shock.*
- **Do not abuse the cord. Never use the cord for carrying, pulling or unplugging the machine. Keep cord away from heat, oil, sharp edges or moving parts.** *Damaged or entangled cords increase the risk of electric shock.*
- **When operating the machine outdoors, use an extension cord suitable for outdoor use.** *Use of a cord suitable for outdoor use reduces the risk of electric shock.*
- **If operating the machine in a damp location is unavoidable, use a residual current device (RCD) protected supply.** *Use of an RCD reduces the risk of electric shock.*

2.3 PERSONAL SAFETY

- **Stay alert, watch what you are doing and use common sense when operating the machine. Do not use the machine while you are tired or under the influence of drugs, alcohol or medication.** *A moment of inattention while operating the machine may result in serious personal injury.*
- **Use personal protective equipment. Always wear eye protection.** *Protective equipment such as a dust mask, non-skid safety shoes, hard hat, or hearing protection used for appropriate conditions will reduce personal injuries.*
- **Prevent unintentional starting. Ensure the switch is in the off-position before connecting to power source and/or battery pack, picking up or carrying the tool.** *Carrying power tools with your finger on the switch or energizing power tools that have the switch on invites accidents.*
- **Remove any adjusting key or wrench before turning the machine on.** *A wrench or a key left attached to a rotating part of the machine may result in personal injury.*
- **Do not overreach. Keep proper footing and balance at all times.** *This enables better control of the machine in unexpected situations.*
- **Dress properly. Do not wear loose clothing or jewellery. Keep your hair, clothing and gloves away from moving parts.** *Loose clothes, jewellery or long hair can be caught in moving parts.*
- **If devices are provided for the connection of dust extraction and collection facilities, ensure these are connected and properly used.** *Use of dust collection can reduce dust-related hazards.*
- **Do not let familiarity gained from frequent use of tools allow you to become complacent and ignore tool safety principles.** *A careless action can cause severe injury within a fraction of a second.*

2.4 MACHINE USE AND CARE

- **Do not force the machine. Use the correct machine for your application.** *The correct machine will do the job better and safer at the rate for which it was designed.*
- **Do not use the machine if the switch does not turn it on and off** *Any machine that cannot be controlled with the switch is dangerous and must be repaired.*
- **Disconnect the plug from the power source and/or remove the battery pack, if detachable, from the machine before making any adjustments, changing accessories, or storing the machine.** *Such preventive safety measures reduce the risk of starting the machine accidentally.*
- **Store an idle machine out of the reach of children and do not allow persons unfamiliar with the machine or these instructions to operate the machine.** *A machine is dangerous in the hands of untrained users.*

- **Maintain the machine and accessories. Check for misalignment or binding of moving parts, breakage of parts and any other condition that may affect the operation of the machine. If damaged, have the machine repaired before use.** *Many accidents are caused by poorly maintained machine.*
- **Keep cutting tools sharp and clean.** *Properly maintained cutting tools with sharp cutting edges are less likely to bind and are easier to control.*
- **Use the machine, accessories etc. in accordance with these instructions, taking into account the working conditions and the work to be performed.** *Use of the machine for operations different from those intended could result in a hazardous situation.*
- **Keep handles and grasping surfaces dry, clean and free from oil and grease.** *Slippery handles and grasping surfaces do not allow for safe handling and control of the tool in unexpected situations.*

2.5 BATTERY TOOL USE AND CARE

- **Recharge only with the charger specified by the manufacturer.** *A charger that is suitable for one type of battery pack may create a risk of fire when used with another battery pack.*
- **Use the machine only with specifically designated batteries.** *Use of any other battery packs may create a risk of injury and fire.*
- **When battery pack is not in use, keep it away from other metal objects, like paper clips, coins, keys, nails, screws or other small metal objects, that can make a connection from one terminal to another.** *Shorting the battery terminals together may cause burns or fire.*
- **Under abusive conditions, liquid may be ejected from the battery; avoid contact. If contact accidentally occurs, flush with water. If liquid contacts eyes, additionally seek medical help.** *Liquid ejected from the battery may cause irritation or burns.*
- **Do not use a battery pack or machine that is damaged or modified.** *Damaged or modified batteries may exhibit unpredictable behaviour resulting in fire, explosion or risk of injury.*
- **Do not expose a battery pack or tool to fire or excessive temperature.** *Exposure to fire or temperature above 130°C (265°F) may cause explosion.*
- **Follow all charging instructions and do not charge the battery pack or tool outside the temperature range specified in the instructions.** *Charging improperly or at temperatures outside the specified range may damage the battery and increase the risk of fire.*

2.6 SERVICE

- **Have your machine serviced by a qualified repair person using only identical replacement parts.** *This will ensure that the safety of the machine is maintained.*
- **Never service damaged battery packs.** *Service of battery packs should only be performed by the manufacturer or authorized service providers.*

3 LAWN MOWER SAFETY WARNINGS

- **Do not use the lawnmower in bad weather conditions, especially when there is a risk of lightning.** *This decreases the risk of being struck by lightning.*
- **Thoroughly inspect the area for wildlife where the lawnmower is to be used.** *Wildlife may be injured by the lawnmower during operation.*
- **Thoroughly inspect the area where the lawnmower is to be used and remove all stones, sticks, wires, bones, and other foreign objects.** *Thrown objects can cause personal injury.*
- **Before using the lawnmower, always visually inspect to see that the blade and the blade assembly are not worn or damaged.** *Worn or damaged parts increase the risk of injury.*
- **Check the grass discharge chute frequently for wear or deterioration.** *A worn or damaged grass discharge chute may increase the risk of personal injury.*
- **Keep guards in place. Guards must be in working order and be properly mounted.** *A guard that is loose, damaged, or is not functioning correctly may result in personal injury.*
- **Keep all cooling air inlets clear of debris.** *Blocked air inlets and debris may result in overheating or risk of fire.*
- **While operating the lawnmower, always wear non-slip and protective footwear. Do not operate the lawnmower when barefoot or wearing open sandals.** *This reduces the chance of injury to the feet from contact with the moving blade.*
- **While operating the lawnmower, always wear long trousers.** *Exposed skin increases the likelihood of injury from thrown objects.*

- **Do not operate the lawnmower on excessively steep slopes.** *This reduces the risk of loss of control, slipping and falling which may result in personal injury.*
- **Do not mow from side-to-side when operating mowers on unlevel or sloped ground. Always mow slopes in the up-and-down direction.** *This reduces the risk of loss of control, slipping and falling which may result in personal injury.*
- **Do not touch blades and other hazardous moving parts while they are still in motion.** *This reduces the risk of injury from moving parts.*
- **When clearing jammed material or cleaning the lawnmower, make sure all power switches are off and the key fob is pulled out.** *Unexpected operation of the lawnmower may result in serious personal injury.*
- **When clearing jammed material or cleaning the lawnmower, make sure all power switches are off and remove (or activate) the disabling device.** *Unexpected operation of the lawnmower may result in serious personal injury.*
- **When working on slopes, always be sure of your footing, always work across the face of slopes, never up or down and exercise extreme caution when changing direction.** *This reduces the risk of loss of control, slipping and falling which may result in personal injury.*
- **Use extreme caution when reversing or pulling the lawn mower towards you.** *Always be aware of your surroundings. Always be aware of your surroundings.*

4 SAFE PRACTICES FOR STAND-ON MOWERS

This machine is capable of amputating hands and feet and throwing objects. Failure to observe the following safety instructions could result in serious injury or death.

4.1 GENERAL INFORMATION

- Read, understand, and follow instructions and warnings in this manual and on the machine, and attachments.
- Only allow operators, who are responsible, trained, familiar with the instructions, and physically capable to operate the machine.
- Do not carry passengers and keep bystanders away.
- Do not operate the machine while under the influence of alcohol or drugs.
- Follow the manufacturer’s recommendation for wheel weights or counterweights.

4.2 PREPARATION BEFORE OPERATING

- Clear the operating area of any objects which could be thrown by or interfere with operation of the machine.
- Keep the area of operation clear of all bystanders, particularly small children. Stop the machine and attachment(s) if anyone enters the area.
- Do not operate the machine without the entire grass discharge chute, or other safety devices in place and functioning properly. Check frequently for signs of wear or deterioration and replace as needed.
- Wear appropriate personal protective equipment such as safety glasses, hearing protection, and footwear.

4.3 OPERATING

- Always drive with both hands. Do not drive with just one hand.
- Only operate the machine in daylight or good artificial light.
- Avoid holes, ruts, bumps, rocks, or other hidden hazards. Uneven terrain could overturn the machine, or cause operator to lose their balance or footing.
- Do not put hands or feet near rotating parts or under the machine. Keep clear of the discharge opening at all times.
- Do not direct discharge material toward anyone. Avoid discharging material against a wall or obstruction. Material may ricochet back toward the operator. Stop the blade(s) when crossing gravel surfaces.
- Do not leave a running machine unattended. Always park on level ground, disengage the attachment, set parking brake, and stop machine.
- Do not mow in reverse unless absolutely necessary. Always look down and behind before and while backing.

4.4 CHILDREN SPECIFIC

- Tragic accidents can occur if the operator is not alert to the presence of children. Children are often attracted to the machine and the mowing activity. Never assume that children will remain where you last saw them.

- Keep children out of the operating area and under the watchful care of a responsible adult other than the operator.
- Do not operate the machine without the entire grass discharge chute, or other safety devices in place and functioning properly. Check frequently for signs of wear or deterioration and replace as needed.
- Do not carry children, even with the blade(s) shut off. Children could fall off and be seriously injured or interfere with safe machine operation. Children who have been given rides in the past could suddenly appear in the mowing area for another ride and be run over or backed over by the machine.

4.5 SLOPE SPECIFIC

Slopes are a major factor related to accidents. Operation on slopes requires extra caution.

- Travel in the manufacturer recommended direction on slopes. Use caution while operating near drop-offs.
- Do not operate machine under any condition where traction, steering, or stability is in question. Tires could slide even if the wheels are stopped.
- Always keep the machine in gear when going down slopes. Do not coast downhill.
- Avoid starting and stopping on slopes. Avoid making sudden changes in speed or direction. Make turns slowly and gradually.
- Use extra care while operating machine with a grass discharge chute or other attachment(s). They can affect the stability of the machine.

4.6 HAULING

Use full width ramps for loading and unloading a machine for transport.

4.7 TOWING

Follow the manufacturer’s recommendation for weight limits for towed equipment and towing on slopes.

4.8 SERVICE

- Keep machine in good working order. Replace worn or damaged parts.
- Use caution when servicing blades. Wrap the blade(s) or wear gloves. Replace damaged blades. Do not repair or alter blade(s).
- **Have your stand-on lawn mower serviced by a qualified repair person using only identical replacement parts.** This will ensure that the safety of the stand-on lawn mower is maintained.
- **Recharge only with the charger specified by the manufacturer.**A charger that is suitable for one type of battery pack may create a risk of fire when used with another battery pack.
- Do not charge stand-on mower in rain, or in wet locations.
- Do not use battery-operated stand-on mower in rain.
- Store Idle Stand-on Mower Indoors - When not in use, stand-on mower should be stored in an indoor dry and locked-up place - out of reach of children.
- Turn off and remove key fob before servicing, cleaning, or removing material from the stand-on mower.

Save all warnings and instructions for future reference.

5 SYMBOLS ON THE PRODUCT

Some of the following symbols may be used on this tool. Please study them and learn their meaning. Proper interpretation of these symbols will allow you to operate the tool better and safer.

Symbol	Name	Explanation
IPX4	Ingress Protection Degree	Protection from splashing water.
V	Volt	Voltage
A	Amperes	Current
Hz	Hertz	Frequency (cycles per second)
W	Watt	Power
⎓	Direct Current	Type or a characteristic of current
mm	Millimeter	Length of size
in.	Inch	Length or size
Ft-lb	Foot-pound	Torque
Nm	Newton meter	Torque
kg	Kilogram	Weight
lb	Pound	Weight
°C	Celsius	Temperature
°F	Fahrenheit	Temperature
MPH	Miles Per Hour	Velocity
km/h	Kilometers Per Hour	Velocity
RPM	Revolutions per minute	Rotational speed
PSI	Pounds per square inch	Intensity of pressure
kPa	Kilopascal	Intensity of pressure
min	Minutes	Time
/min	Per Minute	Revolutions, strokes, surface speed, orbits etc., per minute
n_o	No Load Speed	Rotational speed, at no load
	Safety Alert	Indicates a protential personal injury hazard.
	Read & Understand Operator's Manual	To reduce the risk of injury, user must read and understand operator's manual before using this product.
	Ear Protection	Wear ear protection.
	Eye Protection	Always wear safety googles or safety glasses with side shields and a full face shield when operating this product.
	Maintain Safety Devices	Do not open or remove safety shields while the product is running.
	WARNING --- Keep Hands and Feet Away	To reduce the risk of injury, keep hands and feet away from rotating parts. Do not operate unless discharge cover or grass bag is in its proper place. If damaged, replace immediately.

Symbol	Name	Explanation
	DANGER --- Keep Bystanders Away	Do not mow when children or others are around.
	Never Carry Children	Never carry children or anyone, even when the blades are off.
	Look behind while backing.	Always look down and behind you when maneuvering in reverse or turning around. Make sure children, bystanders, and pets are clear of the area.
	DANGER --- Steep Slope Hazard	Use extra caution on slopes. Do not mow slopes greater than 15 degrees. Do not use on slopes near open water.
	DANGER --- Thrown Objects	Remove objects that can be thrown by the blade in any direction. Wear safety glasses.
100' (30m)	DANGER --- Keep Bystanders Away	Keep all bystanders at least 30m (100ft.) away.
	Do Not Step.	Do not step.
	Lamp Alert	CAUTION --- Do not stare at operating lamp.
	Do Not Tow	Do not tow this machine, it may cause damage to the drive system.
	Neutral Bypass Lever	Pull the neutral bypass lever down to release the drive brake. Never unlock the neutral bypass lever on slopes. It can cause a loss of control.

6 RISK LEVELS

The following signal words and meanings are intended to explain the levels of risk associated with this product.

SYMBOL	SIGNAL	MEANING
⚠	DANGER	Indicates an imminently hazardous situation, which, if not avoided, will result in death or serious injury.
⚠	WARNING	Indicates a potentially hazardous situation, which, if not avoided, could result in death or serious injury.
⚠	CAUTION	Indicates a potentially hazardous situation, which, if not avoided, may result in minor or moderate injury.
	CAUTION	(Without Safety Alert Symbol) Indicates a situation that may result in property damage.

7 RECYCLE

	Separate collection. You must not discard with usual household waste. If it is necessary to replace the machine, or if it is no more use to you, do not discard it with household waste.
	Separate collection of used machine and packaging let you recycle materials and use them again. Use of the recycled materials helps prevent environmental pollution and decreases the requirements for raw materials.
Batteries Li-ion	At the end of their useful life, discard batteries with a precaution for our environment. The battery contains material that is dangerous to you and the environment. You must remove and discard these materials separately at a location that accepts lithium-ion batteries.

8 KNOW YOUR MACHINE

8.1 CONTROL PANEL

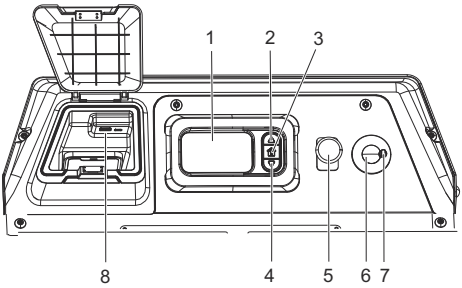

#	Name	Function
1	Digital display	This display shows important electrical system information. Refer to the Electrical section for complete information.
2	Switch page - UP	Switching between pages, direction up.
3	Home/back button	Return to prior screen. Press and hold down to return to the home screen.
4	Switch page - DOWN	Switching between pages, direction down.
5	Deck blades On/Off switch (PTO)	Pull the PTO switch up to activate the mower's cutting blades. Push the knob down to stop the cutting blades.
6	Push button	The push button is used to turn the mower on and off.
7	Key fob	The key fob must be inserted before the push button can be operated.
8	USB port	The USB port provides charging power of 5 Voltage DC at up a draw of 3 Amperes for your cell phone, MP3 player, or other USB devices. **i NOTE** The USB port is powered only when the mower is not in charging mode. Attempting to charge devices whose combined draws exceed 3 amps could damage the USB port and/or the mower. Always close the storage box cover when not in use to prevent debris from becoming trapped in the USB port.
2& 4	Lock screen	To lock and unlock the touch screen (this disables the touch screen's functions), press and hold the UP and DOWN buttons for 3s.

8.2 STEERING CONTROL LEVERS

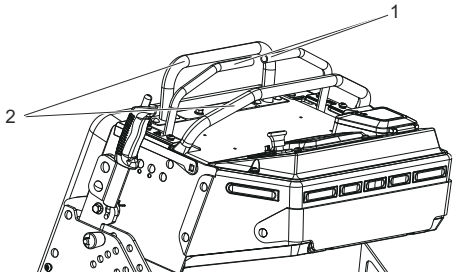

Forward and reverse hand stabilizer bars (2): To stabilize operator's hands while positioning steering control levers.

Steering control levers (1): The two levers control the mower's speed, direction, stopping, neutral lock, and parking brake. Levers are used to steer, accelerate, decelerate, stop, and change direction. When the

control levers are in the park brake position, the mower will not move.

8.3 SAFETY START INTERLOCK SYSTEM

The machine is equipped with a safety start interlock system consisting of the parking brake switches, operator presence control switch, and PTO switch.

ℹ NOTE

The operator presence control switch includes platform switch and steering control levers switch. It can be activated if any of the following conditions are met：

1. The operator stands on the platform, the platform switch is engaged.
2. Either of the steering control levers is not in the park brake position.

The mower's safety start interlock system is also designed to protect the operator and others from accidental injury due to unintentional traction drive system starting.

Check mower safety start interlock system daily, prior to operation. This system is an important mower safety feature. It should be repaired immediately if it malfunctions. The machine incorporates a separate operator presence control switch which will stop the drive system and blade motors when the operator is not in place for any reason while the mower is operating. This is a safety feature designed to prevent runaway or accidental entanglement.

⚠ WARNING

The safety interlock system must not be disconnected or bypassed. Doing so could cause the machine to operate unexpectedly, resulting in personal injury.

To inspect the system:

1. The operator must be in place when testing the operator presence control switch.
2. Press the push button switch with the key fob inserted.
3. Push the steering control levers to the neutral position.
4. Pull the PTO switch ON to engage the motor.
5. Slowly leave the place. The deck blade system should stop.
6. If the deck blade system fails to stop when the operator is not in place and if the cause cannot be determined, contact your greenworkscommercial dealer immediately.

8.4 ELECTRIC TAKE OFF (ETO) SOCKET FOR CONNECTING ACCESSORIES

The machine can be used together with other attachments such as the blower.

9 OPERATION

9.1 BEFORE OPERATION

9.1.1 ADJUST THE DECK CUTTING HEIGHT

⚠ DANGER

Never attempt to make any adjustments to the mower deck while the traction drive system is on or with the deck clutch engaged. Mower blades cannot be seen and are located very close to deck housing. Fingers and toes can be cut off instantly.

Deck height is adjustable from 1"- 5 inches in ¼ inch increments with 17 deck height adjustments.

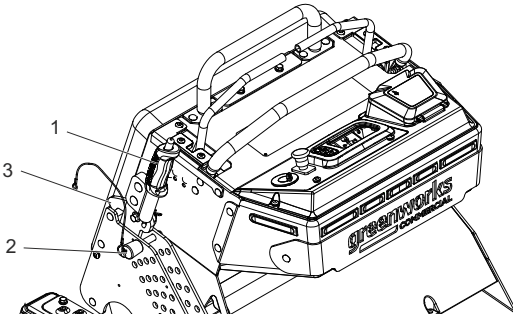

1. Pull the deck height handle (1) back to the top position and lock in place.
2. Remove Deck Height Adjustment Pin (2).
3. Insert the Deck Height Adjustment Pin into desired Height Adjustment Hole.
4. Release pressure on Deck Height Handle to release the deck height lock switch (3) and allow handle to rest back onto pin.

ℹ NOTE

To lock deck height adjustment in highest position for travel or loading/unloading – Pull Deck Height Adjustment Handle completely rearward until handle locks in highest position. To lower deck from highest position – pull rearward on Deck Height Adjustment Handle with one hand until rearward on Deck Height Locking switch to the position, proceed to lower Deck Height Adjustment Handle to desired height.

9.2 OPERATE THE MACHINE

9.2.1 START THE MACHINE

ℹ NOTE

Here are two working modes you can choose:

1. Put down the platform and stand on it.
2. Raise the platform and stand on the ground.

1. With the key fob inserted, press the push button start for the mower to turn ON.
2. Check for the appropriate speed mode by pressing drive speed control button to low speed. The speed button is on the digital display.

ℹ NOTE

It is always recommended to start out in low mode/ slow speed.

3. Push right and left steering control levers inward until stops are contacted.
4. Pull up on deck blades ON/OFF switch (PTO) to start cutting blades for mowing.

ℹ NOTE

Only engage blades when steering control levers are in the NEUTURAL position! NEVER engage blades when moving!

5. Push steering control levers forward for forward motion and pull for reverse motion.

ℹ NOTE

Electric brake will engage after steering control levers are returned to neutral.

9.2.2 DRIVE THE MACHINE

After starting the traction drive system, engage the steering control levers and steer as follows:

⚠ WARNING

Always be aware of what is behind the machine before backing up. Do not mow in reverse unless absolutely necessary. Always look down and behind before and while backing up.

⚠ WARNING

Rapid movement of steering control levers is not recommended as damage to the electrical system components may occur.

- **To go forward,** push steering control levers forward an equal distance.
- **To go in reverse,** pull steering control levers rearward an equal distance.
- **To turn left,** move the right steering control lever farther forward from neutral than the left steering control lever.
- **To turn right,** move the left steering control lever farther forward from neutral than the right steering control lever.
- **To execute a zero-radius turn,** move one steering control lever forward and the other steering control lever rearward. This will allow the drive wheels to counter-rotate.
- **To stop or decrease speed,** move steering control levers to neutral. When going forward, pull back gently on steering control levers. When going in reverse, push forward gently on steering control levers.
- **For an emergency stop,** there are two methods that can be used:
  - When traveling forward or in reverse, place the steering control levers in the park brake position immediately. When moving in the rearward direction, push forward gently on steering control levers and avoid sudden movement. Any sudden movement could cause the front of the mower to come off of the ground, resulting in possible loss of control, thereby causing serious injury or death.
  - Press push button to turn mower OFF. This will shut down the traction drive system and the deck drive system.
- **To make a three-point turn to the right,** move the left steering control lever farther forward from neutral than the right steering control lever and start the turn. Next, pull back on the steering control levers until they are past neutral and the machine starts to go rearward. Pull the right steering control lever farther rearward from neutral than the left steering control lever until the rear of the machine has pivoted around. Then, push the steering control levers forward until they are both past neutral and the machine starts to go forward. Push the left steering control lever farther forward from neutral than the right steering control lever and finish the turn.
- **To increase speed,** increase steering control lever's distance from neutral. The farther forward steering control levers are from neutral, the faster the machine will travel forward. The farther back steering control levers are from neutral, the faster the machine will go in reverse.

FRONT OF MOWER FACES THIS DIRECTION

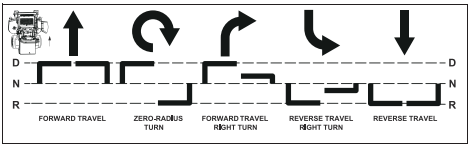

N = NEUTRAL POSITION D = DRIVE POSITION R = REVERSE POSITION
Direction of arrows indicate direction of mower movement
Left steering control lever
Right steering control lever

9.2.3 STOP THE MACHINE

⚠ DANGER

Never make sudden stops or reverse direction, especially when maneuvering on a slope. The steering is designed for sensitive response. Rapid movement of the steering control levers in either direction could result in a reaction of the machine that can cause serious injury.

1. Return steering control levers to the Neutral position. Push the steering control levers outward into park brake position.

   ℹ NOTE

   The PTO switch will disengage automatically when the operator stands on the ground and steering control levers are in the park brake position.

2. Push down on deck blades ON/OFF switch (PTO) to turn off the blades.
3. Press push button to turn the mower OFF.

9.3 SLOPE OPERATION

- Use extreme caution when operating on slopes.
- Do not remove or modify any wheels.
- Watch for holes, ruts, bumps, rocks or other hidden objects. Uneven terrain could overturn the machine. Tall grass can hide obstacles.
- Remove obstacles such as rocks, tree limbs, garbage etc.
- Keep all movement on slopes slow and gradual. Do not make sudden changes in speed or direction.
- Avoid starting and stopping on a slope. If tires lose traction, disengage the blades and proceed slowly straight down the slope.
- Mow a safe distance[minimum of 10 feet (30.5cm)] away from drop-offs, retaining walls, drainage ditches, embankments, water, and other types of hazards to avoid a wheel dropping over the edge or the ground breaking away. This will reduce the risk of the machine suddenly rolling over, which could cause either serious injury or death.
- Use a walk-behind, push mower or hand-held trimmer on slopes and near drop-offs, retaining walls, drainage ditches, embankments and water.
- Do not mow on wet grass. Reduced traction could cause sliding and loss of steering control.
- Do not tow on slopes. The weight of the towed equipment may cause loss of traction and control.
- If the mower's tires lose traction when operating on slopes, disengage the deck drive, place the steering control levers in the park brake position, press push button to turn mower OFF, remove the key fob and get help.
- Never make sudden starts, stops, turns, or reverse direction, especially when maneuvering on slopes. The steering is designed for sensitive response. Rapid movement of the steering control levers in either direction could result in a reaction of the machine that can cause serious injury.
- Never stop suddenly while backing down slopes. This action may result in a reaction of the machine that can cause serious physical injury.
- Do not mow from side-to-side when operating greenworkscommercial mowers on unlevel or sloped ground. Always mow slopes in the up-and-down direction. When operating on slopes up to 15 degrees, be aware of any conditions that may cause the mower drive tires to lose traction, resulting in a possible loss of control of the machine. An operator should not operate on a slope until he is thoroughly familiar with the equipment.

Do not operate on slopes greater than 15 degrees.

Refer to Slope Guide, when determining the degree of slope to be mowed. It is strongly recommended that the operator drive the machine off of the slope, using extreme caution, if any sign of loss of traction is detected. Wait until the condition that caused the problem is resolved before attempting to operate on the slope again. Terrain conditions can affect traction, resulting in possible loss of control of the machine. Some of the conditions to be aware of are:

1. Wet terrain
2. Depressions in the ground (e.g., holes, ruts, washouts)
3. Mounds of dirt
4. Certain types of soil (e.g., sand, loose dirt, gravel, clay)
5. Grass type, density, and height
6. Extremely dry conditions
7. Tire pressure

The attachments mounted to the mower will also affect the way it handles on a slope. Be aware that each attachment's characteristics vary.

These are just a few examples of situations where caution must be used when operating on a slope. There are many other possibilities too numerous to mention. Remember to always exercise extreme caution while operating on any slope.

10 OPERATION SUGGESTIONS

⚠ DANGER

Prior to operation, the operator should be thoroughly familiar with the proper use and operation of the equipment, should read the manual completely and thoroughly, and should have attempted slow moving maneuvers to become familiar with the operation of the equipment before attempting normalspeed operation. An inexperienced operator should not mow on slopes or on uneven terrain.

⚠ WARNING

If you lose steering control while operating the machine, place the steering control levers in the park brake position immediately and press push button to turn the mower OFF. Inspect the machine and consult your greenworkscommercial dealer to resolve the problem before continuing to operate.

⚠ WARNING

The unit's steering control levers are very responsive. For smooth operation, move levers slowly, avoiding sudden movements. Skill and ease of operation come with practice and experience. The machine can spin very rapidly. Use caution when making turns and slow down before making sharp turns.

Inexperienced operators may have a tendency to oversteer and lose control. Slow-moving practice maneuvers are recommended to become familiar with these characteristics before attempting normal-speed operation.

⚠ WARNING

Sharp depressions or raised obstacles (such as gutters or curbs) should not be directly approached at high speed in an attempt to "jump" them as the operator could be thrown from the equipment. Approach at a slow speed and angle one drive wheel at the obstruction. Continue at an angle until the wheel clears and then pivot the opposite wheel around.

When turning on soft or wet turf, keep both wheels rolling either forward or backward. Pivoting on one stopped wheel can damage turf. Keep blades sharp. Many problems with incorrect cutting patterns are due to dull blades or blades which have been sharpened incorrectly. Blade sharpness should be checked daily.

⚠ DANGER

Never work with blades while key fob is in place. Always place deck blades switch (PTO) in the disengaged position, place steering control levers in the park brake position and press push button to turn the mower OFF and remove key fob from switch. Block up mower when you must work under it. Wear gloves when handling blades. Always check for blade damage if mower strikes a rock, branch, or another foreign object during mowing.

- **Direct grass discharge to right,** away from unmowed area. Select a mowing pattern that directs grass discharge towards the outside the mowing area. Generally, this means using a pattern utilizing left turns because side discharge is to the right. In any case, avoid throwing grass discharge onto unmowed area because grass is then mowed "twice." Mowing twice puts an unnecessary load on the unit and reduces mowing efficiency.
- **When mowing a lawn for the first time,** cut grass slightly longer than normal to avoid scalping uneven terrain. When possible, it is best to use the cutting height that was used in the past. When cutting grass taller than six inches, you may want to mow the lawn twice to achieve a better quality of cut.
- **During normal mowing,** cut only about 1/3 of the grass blade. Cutting more than that is not recommended unless grass is sparse or it is the end of the mowing season.
- **Alternate mowing pattern between cuts** to keep the grass growing straight and better dispersion of the clippings.
- **Remember, grass grows at different rates** at different time of the year. Mow more often in the early spring to maintain the same cutting height. As the growth rate slows in mid summer, mow less frequently. If you cannot mow at a regular interval, mow at a high cutting height at first, then mow again two days later at a lower cutting height.
- **Raise the cutting height of the mower** if the cutting width of the mower is wider than the previous mower. This ensures that uneven turf is not cut too short.
- **Raise the cutting height of the mower** if the grass if slightly taller than normal or if it contains a high degree of moisture. Then mow it again with the cutting height set lower.
- **If the machine's forward motion must be stopped** while mowing, a clump of grass clippings may drop onto your lawn. To avoid this, move onto a previously cut area with the blades engaged.

- **Charge the battery immediately.**

Model No.	Battery capacity	Action	Battery capacity	Action
7401207AU (CZ32S8X)/ 7401307AU (CZ36S8X)	5% -10%	The unit will in low blade mode. The maximum drive speed will be 6.4 km/h when the operator stands on the platform, and 4 km/h when the operator stands on the ground.	<5%	The working blade will stop automatically. The unit should immediately be returned to the battery charging area and the unit connected to the battery charger.

- **Allow motors 30 minutes to cool down.** If drive motor exceeds programmed temperature, the motor speed will decrease. If temperature continues to increase, drive will shut down at a higher programmed temperature.

11 ELECTRICAL SYSTEM

11.1 ELECTRICAL SYSTEM SAFETY

- Remove the key fob, disconnect battery cables (P+) in battery box compartment and read operator manual before adjusting or repairing unit.
- Always remove the key fob, and disconnect battery cables (P+) in battery box compartment before working on this unit.
- Always disconnect battery cables (P+) in battery box compartment when transporting unit.
- Keep unit free of grass clippings, leaves and other debris. DO NOT spray water to clean unit. Use only compressed air. Wear adequate eye and hearing protection when cleaning the unit.
- Always wear safety glasses and protective gear near battery. Use insulated tools.
- Clean battery compartment, drive motor compartment, mower deck, etc., of all dirt and debris. Do not use solvents, hard cleaners or abrasives.
- With the mower is ON, mower blade can engage when deck blades ON/OFF switch (PTO) is engaged, even if drive motor is not turning. Keep area clear of bystanders when engaging deck blades ON/OFF switch (PTO).
- Never allow flames, sparks or smoking near batteries.
- Keep batteries out of reach of children.
- Always keep protective shields, covers and guards in place and securely fastened. If they become damaged, repair or replace immediately. Never modify or remove safety devices.

11.2 ELECTRICAL SYSTEM INFORMATION

The greenworkscommercial mower is powered by an 82-volt electrical system. It consists of the following components:

1. Blade controller (1)
2. Blade motor (2)
3. Drive controller (2)
4. Accelerator - right (1)
5. Accelerator - left (1)
6. Digital display (1)
7. Wheel motor with PGR (Planetary Gear Reduction) (2)
8. Battery pack (1)
9. PBS switch (Push button start switch) (1)
10. PTO switch (Deck blades ON/OFF switch) (1)
11. Lower headlight (1)
12. Sidelight - right (1)
13. Sidelight - left (1)
14. Upper headlight (1)
15. USB (1)

11.3 BATTERY AND CHARGER

⚠ WARNING

Maintenance for the various electrical components found on the greenworkscommercial Mower should only be performed by a greenworkscommercial Mower trained technician.

⚠ WARNING

When battery voltage becomes low, the mower blades will stop, although the drive motors will continue to run, enabling driver to continue to drive unit. When the batteries discharge to this point, they require recharging. The unit should immediately be returned to the battery charging area and the unit connected to the battery charger.

⚠ WARNING

Do not attempt to cross roads or railways with low battery levels.

11.3.1 BATTERY CHARGING PORT

The battery charging port is located on the back housing of the machine. Press the release button (1) to open the port cover (2) to charge.

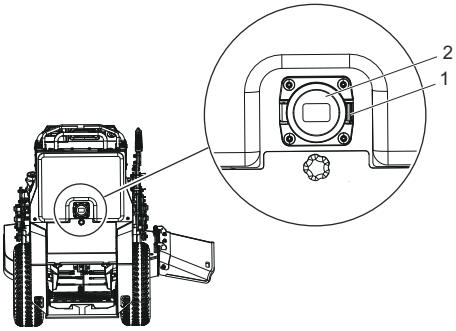

⚠ CAUTION

Use only with greenworkscommercial chargers: CV30KWC.

11.3.2 CHARGING RECOMMENDATIONS

⚠ WARNING

Do Not Use An Extension Cord To Charge Mower! If an extension cord must be used, it must have a minimum of 10 AWG wires and be of the shortest length possible (3.0-4.6 m). Never leave any cords coiled as excessive heart can build up and melt insulation of extension cord wires.

⚠ WARNING

Do not smoke while servicing the batteries.

⚠ WARNING

Always wear safety glasses and protective clothing near battery. Use insulated tools.

⚠ CAUTION

Charging recommendations

- Battery packs do not develop a memory and need not be fully discharged before recharging.
- Batteries left uncharged will slowly discharge. Before initial use each spring season, be sure batteries have a full charge before mowing.
- If charger is not left plugged in, the batteries should be fully charged every 30 days to maintain battery life. Never allow charger to charge more than 15 hours.
- When charging, be sure charger cooling fan inlet and outlet are not blocked.

11.3.3 CHARGE THE BATTERY

⚠ WARNING

More details of charger are referred to in the charger manual. Read and understand all its safety warnings and instructions. Failure to follow them may result in electrical shock, fire and/or serious injury.

1. Turn the ignition power switch to the “OFF” position.
2. Remove the key and make sure the machine comes to a complete stop.
3. Remove the dust cap from the battery charging port on the mower.
4. Plug the charger into the port.
5. Plug other end of charger into household GFCI protected outlet.

⚠ WARNING

Always turn charger “OFF” before disconnecting charger from mower. Disconnect charger cord from wall outlet.

⚠ WARNING

Cover the battery charging port with the dust cap before operation.

11.4 DIGITAL DISPLAY

The function of the digital display, located on the control panel, is to provide electrical system information to the operator. It gives detailed information in the form of pattern, codes and number.

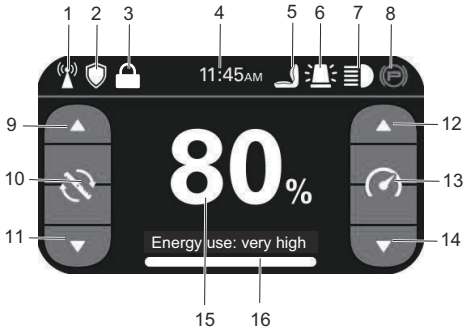

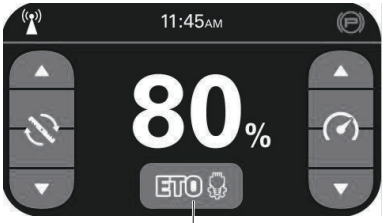

17

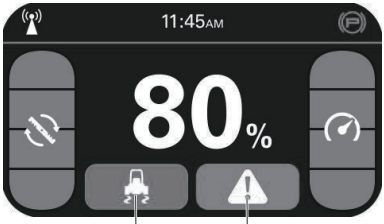

18 19

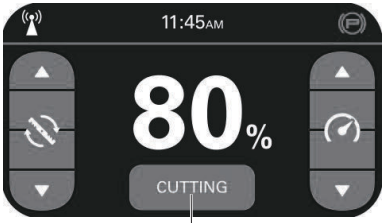

20

#	Name	Function
1		4G GPS Signal
2		Security feature is active.
3		Screen-lock. The touch screen's function is disabled.
4	11:45 AM	Time
5		User presence needed to operate machine.
6		Warning light is on.
7		LED Light is on.
8		The parking brake is engaged.

#	Name	Function
9		Increase blade speed. The blade speed has 4 levels. Each time you touch the screen button, the blade speed will raise a level. When the speed reaches the hightest level, the touch button can't adjust any more.
10		Blade speed
11		Decrease blade speed. The blade speed has 4 levels. Each time you touch the screen button, the blade speed will reduce a level. When the speed reaches the lowest level, the touch button can't adjust any more.
12		Increase driving speed. The drive speed has 4 levels. Each time you touch the screen button, the drive speed will raise a level. When the speed reaches the hightest level, the touch button can't adjust any more.
13		Driving speed
14		Decrease driving speed. The drive speed has 4 levels. Each time you touch the screen button, the drive speed will reduce a level. When the speed reaches the lowest level, the touch button can't adjust any more.
15	80%	Battery percentage. When it equals to 5% or less, stop work and charge the battery as soon as possible.
16	Energy use	Energy use state
17		ETO button. Touch to control the attachment power.
18		Low traction control button. Touch to change to low traction control mode.
19		Error warning. Touch to check the error code and content.
20	CUTTING	Cutting session. Touch to turn to the cutting session page.

11.4.1 ENTER PIN

You can choose whether to set PIN for the machine in App. If you set PIN, you need to enter PIN on the digital display every time you start the machine. The PIN is four numbers ranged from 1 to 6.

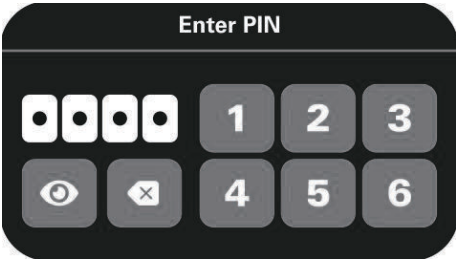

	Set numbers visible when entering PIN.
	Set numbers invisible when entering PIN.
	Delete the numer entered.

11.4.2 ENTER PIN

Press and hold the UP and DOWN buttons on the control panel simutaneously for 3 seconds to lock/unlock the screen. When the screen is locked, all the touch operations will be disabled and the home page will show a lock as below.

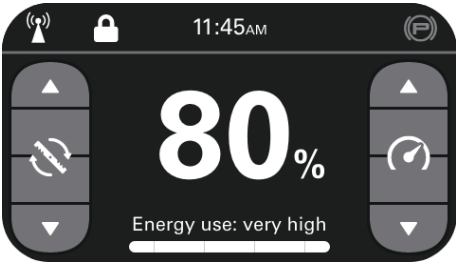

11.4.3 HOME SCREEN STATE

1. Both driving speed and blade speed have 4 levels. The number of the green icon at each side indicates the driving speed or blade speed at present.

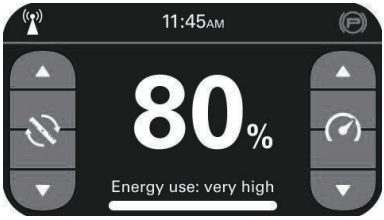

2. If the driving/blade system is severly damaged, the driving/blade speed bar will turn grey until the error is cleared.

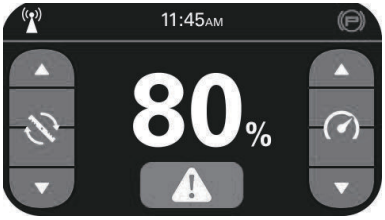

11.4.4 ETO

1. When attachments are assembled on the machine, the ETO page will show on the screen as below. The ETO power is off and the touch button is grey.

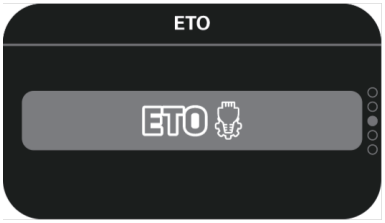

2. Touch the ETO button to power on the ETO and the button will turn green.
3. Press the Switch Page Button or the Home/back button to return to the home page. The ETO icon will show the ETO power state. Green represents "power on" and grey represents "power off".

ℹ NOTE

The ETO icon on the home screen only shows the ETO state, can't set the ETO state.

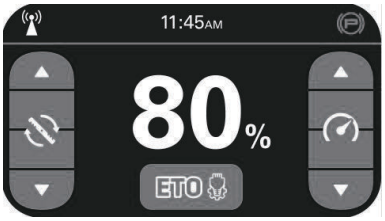

11.4.5 LIGHTS

1. Press the Switch Page Button to turn the digital display to the Lights page as below.

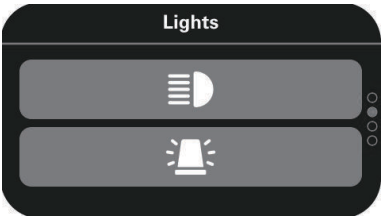

2. Press the LED light button to turn on/off the led light. When the LED light button is green, the LED light is ON, and the LED light icon will show on the home screen. When the LED light button is grey, the LED light is off, and the LED light icon on the home screen will disappear.
3. Press the warning light button to turn on/off the warning light. When the warning light button is green, the warning light is ON, and the warning light icon will show on the home screen. When the warning light button is grey, the warning light is off, and the warning light icon on the home screen will disappear..

11.4.6 SETTINGS

1. Press the Switch Page Button to the settings page. You can set 6 items including Errors, Statistics, Brightness, Language, Preferences and Low traction control.

Item	Function
Errors	This page shows the error contents and suggestions.
Statistics	This page shows the total work hours, total cut hours, and blade usage time.
Brightness	Select your desired screen brightness.
Language	Select the digital display language.
Preferences	Select the units of measure.
Low traction control	Set the low traction control mode.

2. Touch the Errors button to enter the Errors page. This page will show all the errors. Touch the specific error name to know the suggestions. Touch "X" to exit.

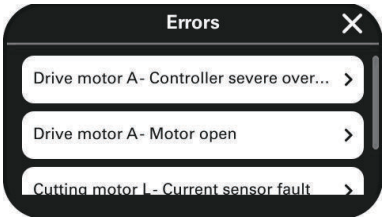

3. Touch the Statistics button to enter the Statistics page. This page shows the total work hours, total cut hours, and blade usage time. When the blade usage time exceeds 25h, "RESET BLADE" button will turn red from green. Touch the "RESET BLADE" button, the blade usage time will clear to zero and the button will return to green. Touch "X" to exit.

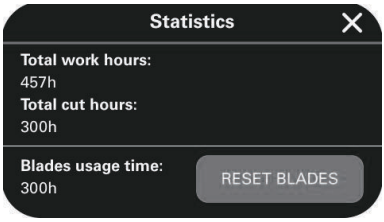

4. Touch the Brightness button to enter the Brightness page. Select your desired screen brightness. Touch "X" to exit.

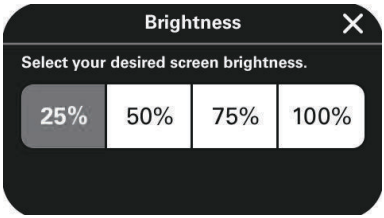

5. Touch the Language button to enter the Language page. Select the language you need. Touch "X" to exit.

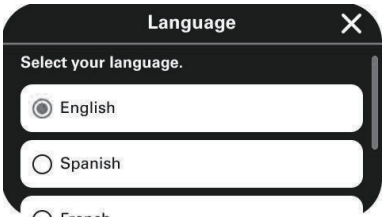

6. Touch the Preferences button to enter the Preferences page. Select the units of measure. Touch "X" to exit.

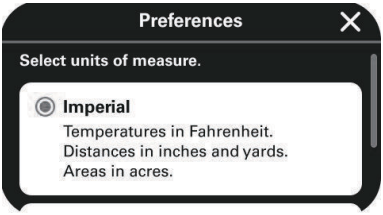

7. Touch the Low traction control button to enter the Low traction control page. The low traction control mode button is grey. Touch the button to activate low traction control mode, the button will turn green and the low traction control icon will show on the home screen.

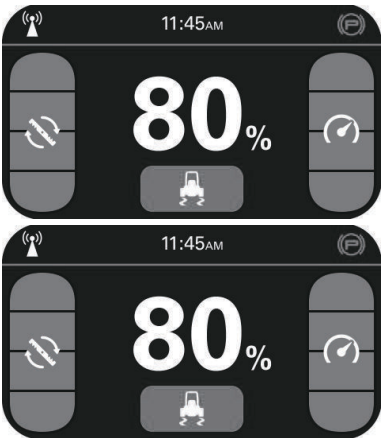

11.4.7 CUTTING SESSION

1. When the cutting blade is working, the "CUTTING" button will show on the home screen.

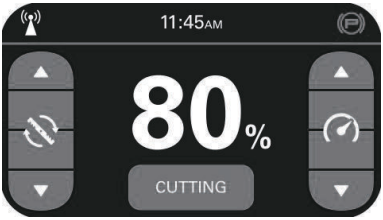

2. Touch the "CUTTING" button to enter Cutting session page.

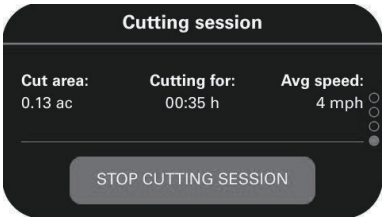

3. When the cutting blade stops working, Cutting session will stop 15 minutes and save the data before the pause. If the cutting blade restarts working, Cutting session will continue the record.
4. Touch the "STOP CUTTING SESSION" button to turn off the cutting session function. The cutting sesion will be recorded.
5. Touch the "START CUTTING SESSION" button to turn on the function.

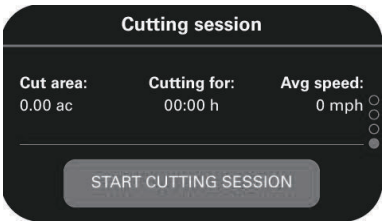

11.4.8 CHARGING

1. When the vehicle is charging, the digital display will show the charging screen only. It will shows the battery percentage and the estimated time for fully charged.

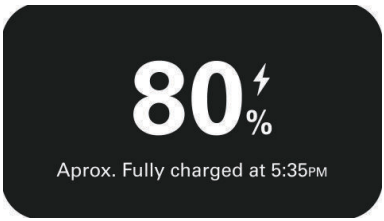

12 APP OPERATION TIPS

12.1 REGISTRATION AND LOGIN

1. Visit the website of Fleet Management: fleet.greenworkscommercial.com.
2. Create an account and then log in.
3. Invite other users in your organization.
4. Scan the QR code of app below, download the app and log in.

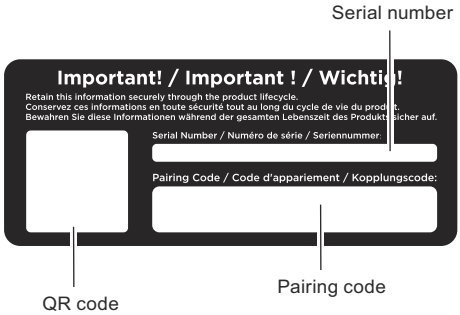

Note: *Please reference Greenworks Commercial App Pairing Page for more details on connecting your machine.*

5. Add a device by typing in serial number and pairing code or by scanning QR code on matching label.

Note: *The QR code on vehicle matching label on this manual is generated from serial number and pairing code.*

13 ERRORS

The Canbus system will take action to protect the user and machine when it detects an issue. When it acts to turn off the machine or a component, it will indicate that an error has occurred, and that error will be shown on the digital display. All electrical errors have a letter code followed by a number. The first letter describes the system that caused the error according to this chart:

Name	Meaning
BMS	Battery error code
BC	Battery charger error code
TR	Right wheel motor controller error code
TL	Left wheel motor controller error code
ML	Left blade motor controller error code
MM	Middle blade motor controller error code
MR	Right blade motor controller error code
AT	Attachment controller error code
DS	Display screen error code

13.1 DISPLAY SCREEN ERROR CODE

Error Codes	Error Contents	User's Operation Suggestions
DS 11	Abnormal Display CAN Communication	1. Please check if the CAN communication wire on the display or the right wheel motor controller is well connected. 2. Please restart the vehicle. 3. Please contact after-sales service.

13.2 BMS ERROR CODE

Error Codes	Error Contents	User's Operation Suggestions
BMS 11	Battery Discharging Slight Overtemp	Please wait for the battery temperature to cool down, it will disappear automatically.
BMS 12	Battery Discharging Severe Overtemp	1. Please restart the vehicle after the battery cools down. 2. Please contact after-sales service.
BMS 13	Battery Discharging Slight Undertemp	Please wait for the battery temperature to warm up, it will disappear automatically.
BMS 14	Battery Discharging Severe Undertemp	1. Please restart the vehicle after the battery warms up. 2. Please contact after-sales service.
BMS 15	Battery Cells Slight Temperature Difference	Please wait for the battery temperature to return to normal, it will disappear automatically.
BMS 16	Battery Cells Severe Temperature Difference	1. Please restart the vehicle after the battery temperature returns to normal. 2. Please contact after-sales service.
BMS 17	Battery Cells Slight Overvoltage	1. Please restart the vehicle. 2. Please contact after-sales service.
BMS 18	Battery Cells Severe Overvoltage	1. Please restart the vehicle. 2. Please contact after-sales service.
BMS 19	Battery Cells Slight Undervoltage	1. Please charge the vehicle. 2. Please contact after-sales service.
BMS 21	Battery Cells Severe Undervoltage	1. Please charge the vehicle. 2. Please contact after-sales service.
BMS 23	Insulation Resistance Severe Insufficient	1. Please restart the vehicle. 2. Please contact after-sales service.
BMS 24	Battery Discharge Slight Overcurrent	Please reduce the load.
BMS 25	Battery Discharge Severe Overcurrent	1. Please reduce the load. 2. Please restart the vehicle. 3. Please contact after-sales service.
BMS 26	Battery Cells Voltage Slight Difference	1. Please restart the vehicle. 2. Please charge the vehicle. 3. Please contact after-sales service.
BMS 27	Battery Cells Voltage Severe Difference	1. Please restart the vehicle. 2. Please charge the vehicle. 3. Please contact after-sales service.
BMS 28	Battery Slight Overvoltage	1. Please restart the vehicle. 2. Please contact after-sales service.
BMS 29	Battery Severe Overvoltage	1. Please restart the vehicle. 2. Please contact after-sales service.
BMS 31	Battery Slight Undervoltage	1. Please charge the vehicle. 2. Please contact after-sales service.
BMS 32	Battery Severe Undervoltage	1. Please charge the vehicle. 2. Please contact after-sales service.

Error Codes	Error Contents	User's Operation Suggestions
BMS 33	Battery Charging Slight Overtemp	The charging current will go down automatically, the error will disappear when the battery cools down.
BMS 34	Battery Charging Severe Overtemp	1. Please stop charging. 2. Please contact after-sales service.
BMS 35	Charging Port Slight Overtemp	Please power off the charger, wait for the charging port to cool down, and then recharge.
BMS 36	Charging Port Severe Overtemp	1. Please power off the charger, wait for the charging port to cool down, and then recharge. 2. Please contact after-sales service.
BMS 37	Discharging B+ Contactor Welded	1. Please restart the vehicle. 2. Please contact after-sales service.
BMS 38	Battery B- Contactor Welded	1. Please restart the vehicle. 2. Please contact after-sales service.
BMS 39	Battery Charging Contactor Welded	1. Please restart the vehicle. 2. Please contact after-sales service.
BMS 41	Battery Heater Contactor Welded	1. Please restart the vehicle. 2. Please contact after-sales service.
BMS 42	Battery Current Sensor Abnormal	1. Please restart the vehicle. 2. Please contact after-sales service.
BMS 43	Battery Sampling Chip Abnormal	1. Please restart the vehicle. 2. Please contact after-sales service.
BMS 44	Battery Cell Open Circuit	1. Please restart the vehicle. 2. Please contact after-sales service.
BMS 45	Master and Slave chips Abnormal	1. Please restart the vehicle. 2. Please contact after-sales service.
BMS 46	Battery BMS Timer Abnormal	1. Please restart the vehicle. 2. Please contact after-sales service.
BMS 47	Charger CAN Communication Timeout	1. Please restart the charger and recharge. 2. Please contact after-sales service.
BMS 48	Battery Precharge Failed	1. Please restart the vehicle. 2. Please contact after-sales service.
BMS 49	Battery 12V Abnormal	1. Please restart the vehicle. 2. Please contact after-sales service.
BMS 51	Battery Heater Abnormal	1. Please restart the vehicle. 2. Please contact after-sales service.
BMS 52	Battery CC2 Detection Abnormal	1. Please restart the vehicle. 2. Please contact after-sales service.
BMS 53	Battery B+ Contactor Coil Short	1. Please restart the vehicle. 2. Please contact after-sales service.
BMS 54	Battery B- Contactor Coil Short	1. Please restart the vehicle. 2. Please contact after-sales service.
BMS 55	Battery Precharge Contactor Coil Short	1. Please restart the vehicle. 2. Please contact after-sales service.

Error Codes	Error Contents	User's Operation Suggestions
BMS 56	Battery Charge Contactor Coil Short	1. Please restart the vehicle. 2. Please contact after-sales service.
BMS 57	Battery Heating Contactor Coil Short	1. Please restart the vehicle. 2. Please contact after-sales service.
BMS 58	Battery Continuous Discharge Overcurrent	1. Please restart the vehicle. 2. Please contact after-sales service.

13.3 BATTERY CHARGER ERROR CODE

Error Codes	Error Contents	User's Operation Suggestions
BC 11	Input Power Undervoltage	1. Please power off the charger to stop charging. 2. Please restart the charger. 3. Please contact after-sales service.
BC 12	Input Power Overvoltage	1. Please power off the charger to stop charging. 2. Please restart the charger. 3. Please contact after-sales service.
BC 13	Output Undervoltage	1. Please power off the charger to stop charging. 2. Please restart the charger. 3. Please contact after-sales service.
BC 14	Output Overvoltage	1. Please power off the charger to stop charging, wait for the voltage to go down. 2. Please restart the charger. 3. Please contact after-sales service.
BC 15	Output Overcurrent	1. Please power off the charger to stop charging. 2. Please restart the charger. 3. Please contact after-sales service.
BC 16	Charger Overtemp	1. Please power off the charger to stop charging, wait for the voltage to go down. 2. Please restart the charger. 3. Please contact after-sales service.
BC 17	Output Short Circuit	1. Please power off the charger to stop charging. 2. Please contact after-sales service.
BC 18	Battery Output Reversed	1. Please power off the charger to stop charging. 2. Please contact after-sales service.
BC 19	No Battery Output Voltage	1. Please power off the charger to stop charging. 2. Please restart the charger. 3. Please contact after-sales service.
BC 21	Non-Load	1. Please power off the charger to stop charging. 2. Please restart the charger. 3. Please contact after-sales service.
BC 22	CAN Communication Abnormal	1. Please power off the charger to stop charging. 2. Please restart the charger. 3. Please contact after-sales service.
BC 23	Internal Communication Abnormal	1. Please power off the charger to stop charging. 2. Please restart the charger. 3. Please contact after-sales service.
BC 24	Charger CC1 Abnormal	1. Please power off the charger to stop charging. 2. Please unplug the charger, and reinsert it. 3. Please contact after-sales service.

13.4 RIGHT WHEEL MOTOR CONTROLLER ERROR CODE

Error Codes	Error Contents	User's Operation Suggestions
TR 12	Right Wheel Motor Controller Overcurrent	1. Please reduce the lode. 2. Please restart the vehicle. 3. Please check if there is short circuit of the right wheel phase wires U, V and W. 4. Please check if the right wheel motor encoder is damaged.
TR 13	Right Wheel Motor Controller Current Sensor Abnormal	1. Please restart the vehicle. 2. Please contact after-sales service.
TR 14	Right Wheel Motor Controller Precharge Failed	1. Please restart the vehicle. 2. Please contact after-sales service.
TR 15	Right Wheel Motor Controller Severe Undertemp	1. Please bring heat-sink of controller temperature above -40 °C, and restart the vehicle. 2. Please contact after-sales service.
TR 16	Right Wheel Motor Controller Severe Overtemp	1. Please reduce the wheel motor load. 2. Please check if the phase wires on the right wheel motor are well connected. 3. Please contact after-sales service.
TR 17	Right Wheel Motor Controller Severe Undervoltage	1. Please check the main fuse. 2. Please check if the output wire of the battery pack is well connected. 3. Please restart the vehicle. 4. Please contact after-sales service.
TR 18	Right Wheel Motor Controller Severe Overvoltage	1. Please restart the vehicle. 2. Please contact after-sales service.
TR 19	Right Wheel Motor Controller Speed Limit Supervision	1. Please restart the vehicle. 2. Please contact after-sales service.
TR 1A	Right Wheel Motor Not Stopped	1. Please restart the vehicle. 2. Please contact after-sales service.
TR 1B	Right Wheel Motor Controller Critical OS General	1. Please restart the vehicle. 2. Please contact after-sales service.
TR 1C	Right Wheel Motor Controller OS General 2	1. Please restart the vehicle. 2. Please contact after-sales service.
TR 1D	Right Wheel Motor Controller Reset Rejected	1. Please restart the vehicle. 2. Please contact after-sales service.
TR 1E	Right Wheel Motor Short	1. Please check if the right wheel motor phase wire is well connected. 2. Please restart the vehicle. 3. Please contact after-sales service.
TR 22	Right Wheel Motor Controller Overtemp Cutback	1. Please reduce the load on the right wheel motor. 2. Please restart the vehicle. 3. Please contact after-sales service.
TR 23	Right Wheel Motor Controller Undervoltage Cutback	1. Please restart the vehicle. 2. Please contact after-sales service.
TR 24	Right Wheel Motor Controller Overvoltage Cutback	1. Please restart the vehicle. 2. Please contact after-sales service.

Error Codes	Error Contents	User's Operation Suggestions
TR 25	Right Wheel Motor Controller Ext 5V Supply Failure	1. Please restart the vehicle. 2. Please contact after-sales service.
TR 26	Right Wheel Motor Controller Ext 12V Supply Failure	1. Please restart the vehicle. 2. Please contact after-sales service.
TR 28	Right Wheel Motor Slight Overtemp	1. Please reduce the load on the right wheel motor. 2. Please restart the vehicle. 3. Please contact after-sales service.
TR 29	Right Wheel Motor Temperature Sensor Abnormal	1. Please check if the motor temperature sensor wiring is well connected. 2. Please restart the vehicle. 3. Please contact after-sales service.
TR 31	Main Contactor Coil Driver Short / Open	1. Please check the wiring on the main contactor coil. 2. Please restart the vehicle. 3. Please contact after-sales service.
TR 32	Right Wheel Motor Controller EM Brake Coil Driver Short / Open	1. Please check the wiring on the EM Brake of the right wheel motor. 2. Please restart the vehicle. 3. Please contact after-sales service.
TR 33	Attachment Contactor Coil Driver Short / Open	1. Please check the wiring on attachment contactor coil. 2. Please restart the vehicle. 3. Please contact after-sales service.
TR 34	Push Button Switch Contactor Coil Driver Short / Open	1. Please check the wiring on push button switch contactor coil. 2. Please restart the vehicle. 3. Please contact after-sales service.
TR 35	Right Wheel Motor Controller Coil 5 Driver Short / Open	1. Please check the wiring on coil 5. 2. Please restart the vehicle. 3. Please contact after-sales service.
TR 36	Right Wheel Motor Sin/Cos Encoder Abnormal	1. Please check if the right wheel motor encoder wire is well connected. 2. Please restart the vehicle. 3. Please contact after-sales service.
TR 37	Right Wheel Motor Phase Open	1. Please check if the right wheel motor phase wire is well connected. 2. Please restart the vehicle. 3. Please contact after-sales service.
TR 38	Main Contactor Welded	1. Please restart the vehicle. 2. Please contact after-sales service.
TR 39	Main Contactor Did Not Close	1. Please check the wiring on the main contactor. 2. Please restart the vehicle. 3. Please contact after-sales service.
TR 3A	Right Wheel Motor Controller Setup Needed	1. Please restart the vehicle. 2. Please contact after-sales service.
TR 41	Right Throttle Wiper High	1. Please check if the right throttle is well connected. 2. Please restart the vehicle. 3. Please contact after-sales service.
TR 42	Right Throttle Input Abnormal	1. Please check if the right throttle is well connected. 2. Please restart the vehicle. 3. Please contact after-sales service.

Error Codes	Error Contents	User's Operation Suggestions
TR 43	Right Pot2 Wiper High	1. Please check if the right throttle is well connected. 2. Please restart the vehicle. 3. Please contact after-sales service.
TR 44	Right Pot2 Throttle Input Abnormal	1. Please check if the right throttle is well connected. 2. Please restart the vehicle. 3. Please contact after-sales service.
TR 46	Right Wheel Motor Controller NV Memory Failure	1. Please restart the vehicle. 2. Please contact after-sales service.
TR 47	Right Wheel Motor Controller HPD Sequencing	1. Please reapply inputs in correct sequence. 2. Please restart the vehicle. 3. Please contact after-sales service.
TR 49	Right Wheel Motor Controller Parameter Change	1. Please restart the vehicle. 2. Please contact after-sales service.
TR 4A	Right Wheel Motor Controller EMR Switch Redundancy	1. Please correct the emergency reverse switch NO input and emergency reverse switch NC input. 2. Please restart the vehicle. 3. Please contact after-sales service.
TR 51	Display CAN Communication Abnormal	1. Please check if the CAN communication wire on the display is well connected. 2. Please restart the vehicle. 3. Please contact after-sales service.
TR 52	Left Wheel Motor Controller CAN Communication Abnormal	1. Please check if the CAN communication wire on the left wheel motor controller is well connected. 2. Please restart the vehicle. 3. Please contact after-sales service.
TR 53	Vehicle Initial State Detection Abnormal	1. Please check if the left and right levers are in the park position and the PTO is pressed. 2. Please restart the vehicle. 3. Please contact after-sales service.
TR 54	Autonomous Controller CAN Communication Abnormal	1. Please check if the left and right levers are in the park position and the PTO is pressed. 2. Please restart the vehicle. 3. Please contact after-sales service.
TR 55	BMS CAN Communication Abnormal	1. Please check if the CAN communication wire on the battery pack is well connected. 2. Please restart the vehicle. 3. Please contact after-sales service.
TR 56	Operator Presence Detection Abnormal	1. Please make sure Operator Presence Control Switch is closed before operating the left and right levers. 2. Please restart the vehicle. 3. Please contact after-sales service.
TR 58	Right Blade Motor Controller CAN Communication Abnormal	1. Please check if the CAN communication wire on the right blade motor controller is well connected. 2. Please restart the vehicle. 3. Please contact after-sales service.
TR 59	Limp Home Mode has been activated	Please contact vehicle owner to unlock the vehicle.

Error Codes	Error Contents	User's Operation Suggestions
TR 61	GPS Module CAN Communication Abnormal	1. Please check if the CAN communication wire on the GPS module is well connected. 2. Please restart the vehicle. 3. Please contact after-sales service.
TR 62	Disable Restart has been activated.	Please contact vehicle owner to unlock the vehicle.
TR 63	Left Blade Motor Controller CAN Communication Abnormal	1. Please check if the CAN communication wire on the left blade motor controller is well connected. 2. Please restart the vehicle. 3. Please contact after-sales service.
TR 64	Second Left Blade Motor Controller CAN Communication Abnormal	1. Please check if the CAN communication wire on the second left blade motor controller is well connected. 2. Please restart the vehicle. 3. Please contact after-sales service.
TR 65	Middle Blade Motor Controller CAN Communication Abnormal	1. Please check if the CAN communication wire on the middle blade motor controller is well connected. 2. Please restart the vehicle. 3. Please contact after-sales service.
TR 66	Second Right Blade Motor Controller CAN Communication Abnormal	1. Please check if the CAN communication wire on the second right blade motor controller is well connected. 2. Please restart the vehicle. 3. Please contact after-sales service.
TR 67	Attachment Controller CAN Communication Abnormal	1. Please check if the CAN communication wire on the attachment controller is well connected. 2. Please restart the vehicle. 3. Please contact after-sales service.
TR 68	Right Wheel Motor Controller VCL Run Time Error	1. Please restart the vehicle. 2. Please contact after-sales service.
TR 71	Right Wheel Motor Controller OS General	1. Please restart the vehicle. 2. Please contact after-sales service.
TR 72	Right Wheel Motor Controller PDO Timeout	1. Please restart the vehicle. 2. Please contact after-sales service.
TR 73	Right Wheel Motor Stall Detected	1. Please reduce the load on the right wheel motor. 2. Please check if the right wheel motor phase wire is well connected. 3. Please check the encoder of right wheel motor. 4. Please check if the encoder wiring of the right wheel motor is well connected. 5. Please restart the vehicle. 6. Please contact after-sales service.
TR 77	Right Wheel Motor Controller Supervision Abnormal	1. Please restart the vehicle. 2. Please contact after-sales service.
TR 79	Right Wheel Motor Controller Supervision Input Check	1. Please check if any switch is damaged or water is entered. 2. Please restart the vehicle. 3. Please contact after-sales service.
TR 82	Right Wheel Motor Controller PDO Mapping Error	1. Please restart the vehicle. 2. Please contact after-sales service.

Error Codes	Error Contents	User's Operation Suggestions
TR 83	Right Wheel Motor Controller Internal Hardware	1. Please restart the vehicle. 2. Please contact after-sales service.
TR 84	Right Wheel Motor Controller Motor Braking Impaired	1. Please restart the vehicle. 2. Please contact after-sales service.
TR 87	Right Wheel Motor Controller Motor Characterization Error	1. Please restart the vehicle. 2. Please contact after-sales service.
TR 88	Right Wheel Motor Controller Encoder Pulse Error	1. Please check if the encoder wiring of the right wheel motor is well connected. 2. Please restart the vehicle. 3. Please contact after-sales service.
TR 89	Right Wheel Motor Controller Parameter Out of Range	1. Please restart the vehicle. 2. Please contact after-sales service.
TR 91	Right Wheel Motor Controller Bad Firmware	1. Please restart the vehicle. 2. Please contact after-sales service.
TR 92	Right Wheel Motor Controller EM Brake Failed to Set	1. Please restart the vehicle. 2. Please contact after-sales service.
TR 93	Right Wheel Motor Controller Encoder LOS	1. Please check if the encoder wiring of the right wheel motor is well connected. 2. Please restart the vehicle. 3. Please contact after-sales service.
TR 94	Right Wheel Motor Controller EMR Timeout	1. Please restart the vehicle. 2. Please contact after-sales service.
TR 96	Right Wheel Motor Controller Pump BDI	1. Please restart the vehicle. 2. Please contact after-sales service.
TR 99	Right Wheel Motor Controller Parameter Mismatch	1. Please restart the vehicle. 2. Please contact after-sales service.
TR 9A	Right Wheel Motor Controller Interlock Braking Supervision	1. Please restart the vehicle. 2. Please contact after-sales service.
TR 9B	Right Wheel Motor Controller EMR Supervision	1. Please restart the vehicle. 2. Please contact after-sales service.
TR A1	Right Wheel Motor Controller Driver 1 Fault	1. Please restart the vehicle. 2. Please contact after-sales service.
TR A2	Right Wheel Motor Controller Driver 2 Fault	1. Please restart the vehicle. 2. Please contact after-sales service.
TR A3	Right Wheel Motor Controller Driver 3 Fault	1. Please restart the vehicle. 2. Please contact after-sales service.
TR A4	Right Wheel Motor Controller Driver 4 Fault	1. Please restart the vehicle. 2. Please contact after-sales service.
TR A5	Right Wheel Motor Controller Driver 5 Fault	1. Please restart the vehicle. 2. Please contact after-sales service.
TR A6	Right Wheel Motor Controller Driver 6 Fault	1. Please restart the vehicle. 2. Please contact after-sales service.

Error Codes	Error Contents	User's Operation Suggestions
TR A7	Right Wheel Motor Controller Driver 7 Fault	1. Please restart the vehicle. 2. Please contact after-sales service.
TR A8	Right Wheel Motor Controller Driver Assignment	1. Please restart the vehicle. 2. Please contact after-sales service.
TR A9	Right Wheel Motor Controller Coil Supply	1. Please restart the vehicle. 2. Please contact after-sales service.
TR B1	Right Wheel Motor Controller Analog 1 Out Of Range	1. Please restart the vehicle. 2. Please contact after-sales service.
TR B2	Right Wheel Motor Controller Analog 2 Out Of Range	1. Please restart the vehicle. 2. Please contact after-sales service.
TR B3	Right Wheel Motor Controller Analog 3 Out Of Range	1. Please restart the vehicle. 2. Please contact after-sales service.
TR B4	Right Wheel Motor Controller Analog 4 Out Of Range	1. Please restart the vehicle. 2. Please contact after-sales service.
TR B5	Right Wheel Motor Controller Analog 5 Out Of Range	1. Please restart the vehicle. 2. Please contact after-sales service.
TR B6	Right Wheel Motor Controller Analog 6 Out Of Range	1. Please restart the vehicle. 2. Please contact after-sales service.
TR B7	Right Wheel Motor Controller Analog 7 Out Of Range	1. Please restart the vehicle. 2. Please contact after-sales service.
TR B8	Right Wheel Motor Controller Analog 8 Out Of Range	1. Please restart the vehicle. 2. Please contact after-sales service.
TR B9	Right Wheel Motor Controller Analog 9 Out Of Range	1. Please restart the vehicle. 2. Please contact after-sales service.
TR BB	Right Wheel Motor Controller Analog 14 Out Of Range	1. Please restart the vehicle. 2. Please contact after-sales service.
TR BD	Right Wheel Motor Controller Analog 18 Out Of Range	1. Please restart the vehicle. 2. Please contact after-sales service.
TR BE	Right Wheel Motor Controller Analog 19 Out Of Range	1. Please restart the vehicle. 2. Please contact after-sales service.
TR BC	Right Wheel Motor Controller Analog Assignment	1. Please restart the vehicle. 2. Please contact after-sales service.
TR C1	Right Wheel Motor Controller Branding Error	1. Please restart the vehicle. 2. Please contact after-sales service.
TR C2	Right Wheel Motor Controller BMS Cutback	1. Please restart the vehicle. 2. Please contact after-sales service.
TR C5	Right Wheel Motor Controller PWM Input 10 Out of Range	1. Please restart the vehicle. 2. Please contact after-sales service.
TR C7	Right Wheel Motor Controller Analog 31 Out of Range	1. Please restart the vehicle. 2. Please contact after-sales service.

Error Codes	Error Contents	User's Operation Suggestions
TR C8	Right Wheel Motor Controller Invalid CAN Port	1. Please restart the vehicle. 2. Please contact after-sales service.
TR C9	Right Wheel Motor Controller VCL Watchdog	1. Please restart the vehicle. 2. Please contact after-sales service.
TR CB	Right Wheel Motor Controller Primary State Error	1. Please restart the vehicle. 2. Please contact after-sales service.
TR CC	Right Wheel Motor Controller PWM Input 29 Out of Range	1. Please restart the vehicle. 2. Please contact after-sales service.
TR CD	Right Wheel Motor Controller PWM Input 28 Out of Range	1. Please restart the vehicle. 2. Please contact after-sales service.
TR D1	Right Wheel Motor Controller Lift Input	1. Please restart the vehicle. 2. Please contact after-sales service.
TR D2	Right Wheel Motor Controller Phase PWM Mismatch	1. Please restart the vehicle. 2. Please contact after-sales service.
TR D3	Right Wheel Motor Controller Hardware Compatibility	1. Please restart the vehicle. 2. Please contact after-sales service.
TR D4	Right Wheel Motor Controller Lower Input	1. Please restart the vehicle. 2. Please contact after-sales service.
TR D6	Right Wheel Motor Controller Hazardous Movement	1. Please restart the vehicle. 2. Please contact after-sales service.
TR DD	Right Wheel Motor Controller IMU Failure	1. Please restart the vehicle. 2. Please contact after-sales service.

13.5 LEFT WHEEL MOTOR CONTROLLER ERROR CODE

Error Codes	Error Contents	User's Operation Suggestions
TL 12	Left Wheel Motor Controller Overcurrent	1. Please reduce the load. 2. Please restart the vehicle. 3. Please check if there is short circuit of the left wheel phase wires U, V and W. 4. Please check if the left wheel motor encoder is damaged.
TL 13	Left Wheel Motor Controller Current Sensor Abnormal	1. Please restart the vehicle. 2. Please contact after-sales service.
TL 14	Left Wheel Motor Controller Precharge Failed	1. Please restart the vehicle. 2. Please contact after-sales service.
TL 15	Left Wheel Motor Controller Severe Undertemp	1. Please bring heat-sink of controller temperature above -40 °C, and restart the vehicle. 2. Please contact after-sales service.
TL16	Left Wheel Motor Controller Severe Overtemp	1. Please reduce the wheel motor load 2. Please check if the phase wires on the left wheel motor are well connected. 3. Please restart the vehicle. 4. Please contact after-sales service.
TL 17	Left Wheel Motor Controller Severe Undervoltage	1. Please check the main fuse. 2. Please check if the output wire of the battery pack is well connected. 3. Please restart the vehicle. 4. Please contact after-sales service.
TL 18	Left Wheel Motor Controller Severe Overvoltage	1. Please restart the vehicle. 2. Please contact after-sales service.
TL 19	Left Wheel Motor Controller Speed Limit Supervision	1. Please restart the vehicle. 2. Please contact after-sales service.
TL 1A	Left Wheel Motor Not Stopped	1. Please restart the vehicle. 2. Please contact after-sales service.
TL 1B	Left Wheel Motor Controller Critical OS General	1. Please restart the vehicle. 2. Please contact after-sales service.
TL 1C	Left Wheel Motor Controller OS General 2	1. Please restart the vehicle. 2. Please contact after-sales service.
TL 1D	Left Wheel Motor Controller Reset Rejected	1. Please restart the vehicle. 2. Please contact after-sales service.
TL 1E	Left Wheel Motor Short	1. Please check if the left wheel motor phase wire is well connected. 2. Please restart the vehicle. 3. Please contact after-sales service.
TL 22	Left Wheel Motor Controller Overtemp Cutback	1. Please reduce the load on the left wheel motor. 2. Please restart the vehicle. 3. Please contact after-sales service.
TL 23	Left Wheel Motor Controller Undervoltage Cutback	1. Please restart the vehicle. 2. Please contact after-sales service.
TL 24	Left Wheel Motor Controller Overvoltage Cutback	1. Please restart the vehicle. 2. Please contact after-sales service.

Error Codes	Error Contents	User's Operation Suggestions
TL 25	Left Wheel Motor Controller Ext 5V Supply Failure	1. Please restart the vehicle. 2. Please contact after-sales service.
TL 26	Left Wheel Motor Controller Ext 12V Supply Failure	1. Please restart the vehicle. 2. Please contact after-sales service.
TL 28	Left Wheel Motor Slight Overtemp	1. Please reduce the load on the left wheel motor. 2. Please restart the vehicle. 3. Please contact after-sales service.
TL 29	Left Wheel Motor Temperature Sensor Abnormal	1. Please check if the motor temperature sensor wiring is well connected. 2. Please restart the vehicle. 3. Please contact after-sales service.
TL 31	Main Contactor Coil Driver Short / Open	1. Please check the wiring on the main contactor coil. 2. Please restart the vehicle. 3. Please contact after-sales service.
TL 32	Left Wheel Motor Controller EM Brake Coil Driver Short / Open	1. Please check the wiring on the EM brake of the left wheel motor. 2. Please restart the vehicle. 3. Please contact after-sales service.
TL 33	Attachment Contactor Coil Driver Short / Open	1. Please check the wiring on attachment contactor coil. 2. Please restart the vehicle. 3. Please contact after-sales service.
TL 34	Push Button Switch Contactor Coil Driver Short / Open	1. Please check the wiring on push button switch contactor coil. 2. Please restart the vehicle. 3. Please contact after-sales service.
TL 35	Left Wheel Motor Controller Coil 5 Driver Short / Open	1. Please check the wiring on coil 5. 2. Please restart the vehicle. 3. Please contact after-sales service.
TL 36	Left Wheel Motor Sin/Cos Encoder Abnormal	1. Please check if the left wheel motor encoder wire is well connected. 2. Please restart the vehicle. 3. Please contact after-sales service.
TL 37	Left Wheel Motor Phase Open	1. Please check if the left wheel motor phase wire is well connected. 2. Please restart the vehicle. 3. Please contact after-sales service.
TL 38	Main Contactor Welded	1. Please restart the vehicle. 2. Please contact after-sales service.
TL 39	Main Contactor Did Not Close	1. Please check the wiring on the main contactor. 2. Please restart the vehicle. 3. Please contact after-sales service.
TL 3A	Left Wheel Motor Controller Setup Needed	1. Please restart the vehicle. 2. Please contact after-sales service.
TL 41	Left Throttle Wiper High	1. Please check if the left throttle is well connected. 2. Please restart the vehicle. 3. Please contact after-sales service.
TL 42	Left Throttle Input Abnormal	1. Please check if the left throttle is well connected. 2. Please restart the vehicle. 3. Please contact after-sales service.

Error Codes	Error Contents	User's Operation Suggestions
TL 43	Left Pot2 Wiper High	1. Please check if the left throttle is well connected. 2. Please restart the vehicle. 3. Please contact after-sales service.
TL 44	Left Pot2 Throttle Input Abnormal	1. Please check if the left throttle is well connected. 2. Please restart the vehicle. 3. Please contact after-sales service.
TL 46	Left Wheel Motor Controller NV Memory Failure	1. Please restart the vehicle. 2. Please contact after-sales service.
TL 47	Left Wheel Motor Controller HPD Sequencing	1. Please reapply inputs in correct sequence. 2. Please restart the vehicle. 3. Please contact after-sales service.
TL 49	Left Wheel Motor Controller Parameter Change	1. Please restart the vehicle. 2. Please contact after-sales service.
TL 4A	Left Wheel Motor Controller EMR Switch Redundancy	1. Please correct the emergency reverse switch NO input and emergency reverse switch NC input. 2. Please restart the vehicle. 3. Please contact after-sales service.
TL 51	Display CAN Communication Abnormal	1. Please check if the CAN communication wire on the display is well connected. 2. Please restart the vehicle. 3. Please contact after-sales service.
TL 52	Right Wheel Motor Controller CAN Communication Abnormal	1. Please check if the CAN communication wire on the left wheel motor controller is well connected. 2. Please restart the vehicle. 3. Please contact after-sales service.
TL 53	Vehicle Initial State Detection Abnormal	1. Please check if the right and left levers are in the park position and the PTO is pressed. 2. Please restart the vehicle. 3. Please contact after-sales service.
TL 54	Autonomous Controller CAN Communication Abnormal	1. Please check if the CAN communication wire on the autonomous controller is well connected. 2. Please restart the vehicle. 3. Please contact after-sales service.
TL 55	BMS CAN Communication Abnormal	1. Please check if the CAN communication wire on the battery pack is well connected. 2. Please restart the vehicle. 3. Please contact after-sales service.
TL 56	Operator Presence Detection Abnormal	1. Please make sure Operator Presence Control Switch is closed before operating the right and left levers. 2. Please restart the vehicle. 3. Please contact after-sales service.
TL 61	GPS Module CAN Communication Abnormal	1. Please check if the CAN communication wire on the GPS module is well connected. 2. Please restart the vehicle 3. Please contact after-sales service.
TL 68	Left Wheel Motor Controller VCL Run Time Error	1. Please restart the vehicle. 2. Please contact after-sales service.

Error Codes	Error Contents	User's Operation Suggestions
TL 71	Left Wheel Motor Controller OS General	1. Please restart the vehicle. 2. Please contact after-sales service.
TL 72	Left Wheel Motor Controller PDO Timeout	1. Please restart the vehicle. 2. Please contact after-sales service.
TL 73	Left Wheel Motor Stall Detected	1. Please reduce the load on the left wheel motor. 2. Please check if the left wheel motor phase wire is well connected. 3. Please check the encoder of left wheel motor. 4. Please check if the encoder wiring of the left wheel motor is well connected. 5. Please restart the vehicle. 6. Please contact after-sales service.
TL 77	Left Wheel Motor Controller Supervision Abnormal	1. Please restart the vehicle. 2. Please contact after-sales service.
TL 79	Left Wheel Motor Controller Supervision Input Check	1. Please check if any switch is damaged or water is entered. 2. Please restart the vehicle. 3. Please contact after-sales service.
TL 82	Left Wheel Motor Controller PDO Mapping Error	1. Please restart the vehicle. 2. Please contact after-sales service.
TL 83	Left Wheel Motor Controller Internal Hardware	1. Please restart the vehicle. 2. Please contact after-sales service.
TL 84	Left Wheel Motor Controller Motor Braking Impaired	1. Please restart the vehicle. 2. Please contact after-sales service.
TL 87	Left Wheel Motor Controller Motor Characterization Error	1. Please restart the vehicle. 2. Please contact after-sales service.
TL 88	Left Wheel Motor Controller Encoder Pulse Error	1. Please check if the encoder wiring of the left wheel motor is well connected. 2. Please restart the vehicle. 3. Please contact after-sales service.
TL 89	Left Wheel Motor Controller Parameter Out of Range	1. Please restart the vehicle. 2. Please contact after-sales service.
TL 91	Left Wheel Motor Controller Bad Firmware	1. Please restart the vehicle. 2. Please contact after-sales service.
TL 92	Left Wheel Motor Controller EM Brake Failed to Set	1. Please restart the vehicle. 2. Please contact after-sales service.
TL 93	Left Wheel Motor Controller Encoder LOS	1. Please check if the encoder wiring of the left wheel motor is well connected. 2. Please restart the vehicle. 3. Please contact after-sales service.
TL 94	Left Wheel Motor Controller EMR Timeout	1. Please restart the vehicle. 2. Please contact after-sales service.
TL 96	Left Wheel Motor Controller Pump BDI	1. Please restart the vehicle. 2. Please contact after-sales service.
TL 99	Left Wheel Motor Controller Parameter Mismatch	1. Please restart the vehicle. 2. Please contact after-sales service.

Error Codes	Error Contents	User's Operation Suggestions
TL 9A	Left Wheel Motor Controller Interlock Braking Supervision	1. Please restart the vehicle. 2. Please contact after-sales service.
TL 9B	Left Wheel Motor Controller EMR Supervision	1. Please restart the vehicle. 2. Please contact after-sales service.
TL A1	Left Wheel Motor Controller Driver 1 Fault	1. Please restart the vehicle. 2. Please contact after-sales service.
TL A2	Left Wheel Motor Controller Driver 2 Fault	1. Please restart the vehicle. 2. Please contact after-sales service.
TL A3	Left Wheel Motor Controller Driver 3 Fault	1. Please restart the vehicle. 2. Please contact after-sales service.
TL A4	Left Wheel Motor Controller Driver 4 Fault	1. Please restart the vehicle. 2. Please contact after-sales service.
TL A5	Left Wheel Motor Controller Driver 5 Fault	1. Please restart the vehicle. 2. Please contact after-sales service.
TL A6	Left Wheel Motor Controller Driver 6 Fault	1. Please restart the vehicle. 2. Please contact after-sales service.
TL A7	Left Wheel Motor Controller Driver 7 Fault	1. Please restart the vehicle. 2. Please contact after-sales service.
TL A8	Left Wheel Motor Controller Driver Assignment	1. Please restart the vehicle. 2. Please contact after-sales service.
TL A9	Left Wheel Motor Controller Coil Supply	1. Please restart the vehicle. 2. Please contact after-sales service.
TL B1	Left Wheel Motor Controller Analog 1 Out Of Range	1. Please restart the vehicle. 2. Please contact after-sales service.
TL B2	Left Wheel Motor Controller Analog 2 Out Of Range	1. Please restart the vehicle. 2. Please contact after-sales service.
TL B3	Left Wheel Motor Controller Analog 3 Out Of Range	1. Please restart the vehicle. 2. Please contact after-sales service.
TL B4	Left Wheel Motor Controller Analog 4 Out Of Range	1. Please restart the vehicle. 2. Please contact after-sales service.
TL B5	Left Wheel Motor Controller Analog 5 Out Of Range	1. Please restart the vehicle. 2. Please contact after-sales service.
TL B6	Left Wheel Motor Controller Analog 6 Out Of Range	1. Please restart the vehicle. 2. Please contact after-sales service.
TL B7	Left Wheel Motor Controller Analog 7 Out Of Range	1. Please restart the vehicle. 2. Please contact after-sales service.
TL B8	Left Wheel Motor Controller Analog 8 Out Of Range	1. Please restart the vehicle. 2. Please contact after-sales service.
TL B9	Left Wheel Motor Controller Analog 9 Out Of Range	1. Please restart the vehicle. 2. Please contact after-sales service.
TL BB	Left Wheel Motor Controller Analog 14 Out Of Range	1. Please restart the vehicle. 2. Please contact after-sales service.

Error Codes	Error Contents	User's Operation Suggestions
TL BD	Left Wheel Motor Controller Analog 18 Out Of Range	1. Please restart the vehicle. 2. Please contact after-sales service.
TL BE	Left Wheel Motor Controller Analog 19 Out Of Range	1. Please restart the vehicle. 2. Please contact after-sales service.
TL BC	Left Wheel Motor Controller Analog Assignment	1. Please restart the vehicle. 2. Please contact after-sales service.
TL C1	Left Wheel Motor Controller Branding Error	1. Please restart the vehicle. 2. Please contact after-sales service.
TL C2	Left Wheel Motor Controller BMS Cutback	1. Please restart the vehicle. 2. Please contact after-sales service.
TL C5	Left Wheel Motor Controller PWM Input 10 Out of Range	1. Please restart the vehicle. 2. Please contact after-sales service.
TL C7	Left Wheel Motor Controller Analog 31 Out of Range	1. Please restart the vehicle. 2. Please contact after-sales service.
TL C8	Left Wheel Motor Controller Invalid CAN Port	1. Please restart the vehicle. 2. Please contact after-sales service.
TL C9	Left Wheel Motor Controller VCL Watchdog	1. Please restart the vehicle. 2. Please contact after-sales service.
TL CB	Left Wheel Motor Controller Primary State Error	1. Please restart the vehicle. 2. Please contact after-sales service.
TL CC	Left Wheel Motor Controller PWM Input 29 Out of Range	1. Please restart the vehicle. 2. Please contact after-sales service.
TL CD	Left Wheel Motor Controller PWM Input 28 Out of Range	1. Please restart the vehicle. 2. Please contact after-sales service.
TL D1	Left Wheel Motor Controller Lift Input	1. Please restart the vehicle. 2. Please contact after-sales service.
TL D2	Left Wheel Motor Controller Phase PWM Mismatch	1. Please restart the vehicle. 2. Please contact after-sales service.
TL D3	Left Wheel Motor Controller Hardware Compatibility	1. Please restart the vehicle. 2. Please contact after-sales service.
TL D4	Left Wheel Motor Controller Lower Input	1. Please restart the vehicle. 2. Please contact after-sales service.
TL D6	Left Wheel Motor Controller Hazardous Movement	1. Please restart the vehicle. 2. Please contact after-sales service.
TL DD	Left Wheel Motor Controller IMU Failure	1. Please restart the vehicle. 2. Please contact after-sales service.

13.6 LEFT BLADE MOTOR CONTROLLER ERROR CODE

Error Codes	Error Contents	User's Operation Suggestions
ML 11	Left Blade Motor Controller Hardware Overvoltage or Overcurrent	1. Please reduce the load. 2. Please restart the vehicle. 3. Please check if there is short circuit of left blade motor phase wires U, V and W.
ML 12	Left Blade Motor Controller Overcurrent	1. Please reduce the load. 2. Please restart the PTO switch. 3. Please restart the vehicle. 4. Please check if there is short circuit of left blade motor phase wires U, V and W.
ML 13	Left Blade Motor Controller Overvoltage	1. Please restart the PTO switch. 2. Please restart the vehicle. 3. Please contact after-sales service.
ML 14	Left Blade Motor Controller Undervoltage	1. Please restart the PTO switch. 2. Please check the main fuse. 3. Please check if the output wire of the battery pack is well connected. 4. Please restart the vehicle. 5. Please contact after-sales service.
ML16	Left Blade Motor Phase Open	1. Please check if the left blade motor phase wire is well connected. 2. Please restart the vehicle. 3. Please contact after-sales service.
ML 17	Left Blade Motor Controller Severe Overtemp	1. Please reduce the motor load. 2. Please check if the phase wires on the left blade motor are well connected. 3. Please contact after-sales service.
ML 18	Left Blade Motor Controller EEPROM Abnormal	1. Please restart the vehicle. 2. Please contact after-sales service.
ML 21	Left Blade Motor Stall Detected	1. Please reduce the load on the left blade motor. 2. Please restart the PTO switch. 3. Please check if the left blade motor phase wires are well connected. 4. Please restart the vehicle. 5. Please contact after-sales service.
ML 22	Left Blade Motor System Start Failure	1. Please restart the PTO switch. 2. Please reduce the load on the left blade motor. 3. Please restart the vehicle. 4. Please contact after-sales service.
ML 23	Left Blade Motor Controller Precharge Failed	1. Please restart the vehicle. 2. Please contact after-sales service.
ML 24	CAN Communication with Right Wheel Motor Controller Abnormal	1. Please check if the CAN communication wiring on the right wheel motor controller is well connected. 2. Please restart the vehicle. 3. Please contact after-sales service.
ML 26	Left Blade Motor Controller MOSFET Abnormal	1. Please restart the vehicle. 2. Please contact after-sales service.

Error Codes	Error Contents	User's Operation Suggestions
ML 27	Left Blade Motor Controller Temperature Sensor Abnormal	1. Please restart the vehicle. 2. Please contact after-sales service.
ML 28	Left Blade Motor Controller Self-Check Abnormal	1. Please restart the vehicle. 2. Please contact after-sales service.

13.7 MIDDLE BLADE MOTOR CONTROLLER ERROR CODE

Error Codes	Error Contents	User's Operation Suggestions
MM 11	Middle Blade Motor Controller Hardware Overvoltage or Overcurrent	1. Please reduce the load. 2. Please restart the vehicle. 3. Please check if there is short circuit of middle blade motor phase wires U, V and W.
MM 12	Middle Blade Motor Controller Overcurrent	1. Please reduce the load. 2. Please restart the PTO switch. 3. Please restart the vehicle. 4. Please check if there is short circuit of middle blade motor phase wires U, V and W.
MM 13	Middle Blade Motor Controller Overvoltage	1. Please restart the PTO switch. 2. Please restart the vehicle. 3. Please contact after-sales service.
MM 14	Middle Blade Motor Controller Undervoltage	1. Please restart the PTO switch. 2. Please check the main fuse. 3. Please check if the output wire of the battery pack is well connected. 4. Please restart the vehicle. 5. Please contact after-sales service.
MM16	Middle Blade Motor Phase Open	1. Please check if the middle blade motor phase wire is well connected. 2. Please restart the vehicle. 3. Please contact after-sales service.
MM 17	Middle Blade Motor Controller Severe Overtemp	1. Please reduce the motor load. 2. Please check if the phase wires on the middle blade motor are well connected. 3. Please contact after-sales service.
MM 18	Middle Blade Motor Controller EEPROM Abnormal	1. Please restart the vehicle. 2. Please contact after-sales service.
MM 21	Middle Blade Motor Stall Detected	1. Please reduce the load on the middle blade motor. 2. Please restart the PTO switch. 3. Please check if the middle blade motor phase wires are well connected. 4. Please restart the vehicle. 5. Please contact after-sales service.
MM 22	Middle Blade Motor System Start Failure	1. Please restart the PTO switch. 2. Please reduce the load on the middle blade motor. 3. Please restart the vehicle. 4. Please contact after-sales service.
MM 23	Middle Blade Motor Controller Precharge Failed	1. Please restart the vehicle. 2. Please contact after-sales service.
MM 24	CAN Communication with Right Wheel Motor Controller Abnormal	1. Please check if the CAN communication wiring on the right wheel motor controller is well connected. 2. Please restart the vehicle. 3. Please contact after-sales service.
MM 26	Middle Blade Motor Controller MOSFET Abnormal	1. Please restart the vehicle.

Error Codes	Error Contents	User's Operation Suggestions
		2. Please contact after-sales service.
MM 27	Middle Blade Motor Controller Temperature Sensor Abnormal	1. Please restart the vehicle. 2. Please contact after-sales service.
MM 28	Middle Blade Motor Controller Self-Check Abnormal	1. Please restart the vehicle. 2. Please contact after-sales service.

13.8 RIGHT BLADE MOTOR CONTROLLER ERROR CODE

Error Codes	Error Contents	User's Operation Suggestions
MR 11	Right Blade Motor Controller Hardware Overvoltage or Overcurrent	1. Please reduce the load. 2. Please restart the vehicle. 3. Please check if there is short circuit of right blade motor phase wires U, V and W.
MR 12	Right Blade Motor Controller Overcurrent	1. Please reduce the load. 2. Please restart the PTO switch. 3. Please restart the vehicle. 4. Please check if there is short circuit of right blade motor phase wires U, V and W.
MR 13	Right Blade Motor Controller Overvoltage	1. Please restart the PTO switch. 2. Please restart the vehicle. 3. Please contact after-sales service.
MR 14	Right Blade Motor Controller Undervoltage	1. Please restart the PTO switch. 2. Please check the main fuse. 3. Please check if the output wire of the battery pack is well connected. 4. Please restart the vehicle. 5. Please contact after-sales service.
MR16	Right Blade Motor Phase Open	1. Please check if the right blade motor phase wire is well connected. 2. Please restart the vehicle. 3. Please contact after-sales service.
MR 17	Right Blade Motor Controller Severe Overtemp	1. Please reduce the motor load. 2. Please check if the phase wires on the right blade motor are well connected. 3. Please contact after-sales service.
MR 18	Right Blade Motor Controller EEPROM Abnormal	1. Please restart the vehicle. 2. Please contact after-sales service.
MR 21	Right Blade Motor Stall Detected	1. Please reduce the load on the right blade motor. 2. Please restart the PTO switch. 3. Please check if the right blade motor phase wires are well connected. 4. Please restart the vehicle. 5. Please contact after-sales service.
MR 22	Right Blade Motor System Start Failure	1. Please restart the PTO switch. 2. Please reduce the load on the right blade motor. 3. Please restart the vehicle. 4. Please contact after-sales service.
MR 23	Right Blade Motor Controller Precharge Failed	1. Please restart the vehicle. 2. Please contact after-sales service.
MR 24	CAN Communication with Right Wheel Motor Controller Abnormal	1. Please check if the CAN communication wiring on the right wheel motor controller is well connected. 2. Please restart the vehicle. 3. Please contact after-sales service.
MR 26	Right Blade Motor Controller MOSFET Abnormal	1. Please restart the vehicle. 2. Please contact after-sales service.

Error Codes	Error Contents	User's Operation Suggestions
MR 27	Right Blade Motor Controller Temperature Sensor Abnormal	1. Please restart the vehicle. 2. Please contact after-sales service.
MR 28	Right Blade Motor Controller Self-Check Abnormal	1. Please restart the vehicle. 2. Please contact after-sales service.

14 MAINTENANCE

Regular maintenance is the best prevention for costly downtime or expensive, premature repair. The following pages contain suggested maintenance information and schedules which the operator should follow on a routine basis. Remain alert for unusual noises, as they could be signaling a problem. Visually inspect the machine for any abnormal wear or damage.

14.1 MOWER BLADE MAINTENANCE

Check the mower blades daily. They are the key to power efficiency and well-groomed turf. Keep them sharp -- a dull blade will tear rather than cut the grass, leaving a brown ragged top on the grass within a few hours. A dull blade also requires more power. Replace any blade that is bent, cracked or broken.

⚠ WARNING

Never attempt to straighten a bent blade by heating, or weld a cracked or broken blade as the blade may break and cause serious injury. Replace worn or damaged blades.

⚠ WARNING

Never work with blades while key is in the ignition switch. Press push button to turn the mower OFF, remove key fob from switch and disconnect battery cables (P+) in battery box compartment. Block up mower when you must work under it. Wear gloves when handling blades. Always check for blade damage if mower strikes a rock, branch or other foreign objects!

⚠ DANGER

The blade adapter will come off when the blade cap screw is removed. Touch-up sharpening can be done with a file. Check the blades for balance following grinding. A commercial balancing tool is available through most hardware supply stores, or balancing can be done by placing the blade on an inverted line punch or 12.7mm (1/2") bolt. Blade should not lean or tilt. While spinning the blade slowly, it should not wobble. If blade is out of balance, true it up before reinstalling. Lay the blade on a flat surface and check for distortion. Replace any distorted blade.

⚠ WARNING

- The blade sail (curved part) must be pointing upward toward the inside of the deck to ensure proper cutting.
- When mounting blades, rotate them after installation to ensure blade tips do not touch each other or sides of the mower.
- Failure to correctly torque the bolt may result in the loss of the blade, which can cause serious injury.
- Mower blades are sharp and can cut. Wear gloves and use extra caution when servicing them.

14.1.1 REMOVE THE BLADE

1. Press push button to turn the mower OFF, remove key fob from switch
2. Rotate the bolt counterclockwise to remove the water baffle.

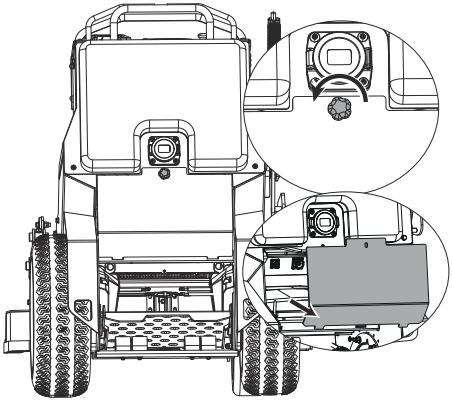

3. Disconnect battery cables (P+) in battery box compartment.

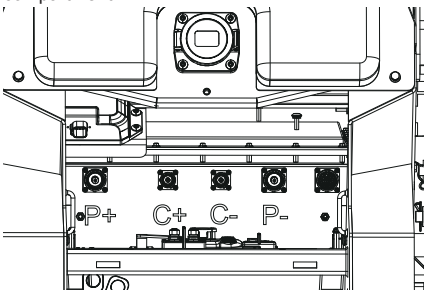

4. Lift the front of the mower and block and secure the machine to allow serviceman to change the blade under the mower.
5. While wearing leather padded gloves, grasp the blade closely with one hand in order to prevent the blade from turning and use a 24mm wrench with your other hand to loosen the bolt fixing its blade in place.
6. Turn the bolt COUNTERCLOCKWISE to loosen and CLOCKWISE to tighten.

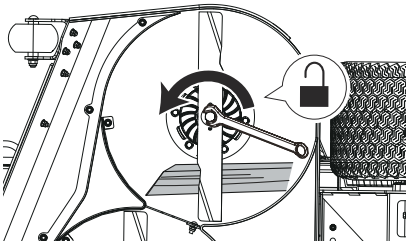

7. Remove the bolt and the blade.

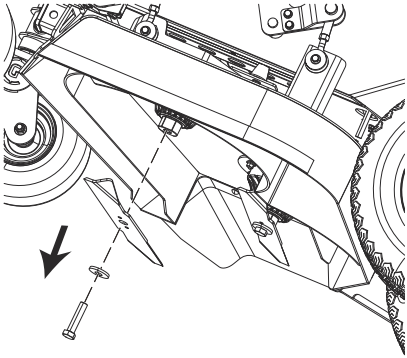

14.1.2 INSTALL THE BLADE

1. Place the blade with the cutting blade toward the ground.
2. Install the bolt.
3. Turn the blade bolt CLOCKWISE with a socket or wrench to secure the blade.
4. Thread the blade nut on the shaft and finger tighten.
5. Torque the blade nut down clockwise using a torquewrench (not provided) to ensure the bolt is properlytightened. The recommended torque for the blade nut is 155-160N.m.

14.2 TIRES

It is important for level mowing that all tires have the correct amount of air pressure. The recommended pressure are:

ℹ NOTE

Tire pressure should only be measured or adjusted when tires are cold.

Front caster wheels	28 psi
Drive wheels	20 psi

ℹ NOTE

Inspect the tires daily. Replace immediately if damaged.

⚠ WARNING

Check the tire pressure carefully while inflating. Too much air in the tire could cause the tire to burst, causing serious personal injury.

14.3 TORQUE VALUES

⚠ WARNING

Particular attention must be given to tightening the drive wheel lug nuts and blade spindle bolts. Failure to correctly torque these items may result in the loss of a wheel or blade, which can cause serious damage or personal injury.

Torque values are given below:

Part	Ft-lbs.	Nm
Wheel (lug) nuts	83-118	112-132

Lug nuts only -It is recommended that these be checked after the first 2 hours of operation, initially, every 100 hours and following removal for repair or replacement.

14.4 BATTERY PACK MAINTENANCE AND STORAGE

Your greenworkscommercial mower is powered by a battery pack which, when maintained properly, will provide years of useful life. For proper care, adhere to the following instructions:

- Always charge batteries after each use.
- Whenever a battery pack is fully discharged and turned off, it is best to recharge the battery as soon as possible. Over-discharge of the battery pack means the battery life will be shortened and the battery may become permanently damaged. There is no need to fully charge; it will be beneficial even if you only charge the battery pack for 5-10 minutes. It is best to recharge it within 24 hours.
- Check that battery cables are securely tightened to batteries each time you service the battery.
- Keep grass, dirt and debris from collecting near battery terminals and in battery area.

- Charge batteries indoors in a well-ventilated and dry location away from sparks or flames. Never expose charger to rain, vapor or liquid.
- Charge only lithium-ion batteries provided by greenworkscommercial.
- Do not touch uninsulated portion of charger (terminal pins) or of output connector.
- Do not use with defective cords and wires. Replace defective cords and wires immediately.
- For long-term storage, please make sure the storage temperature is -20°C ~ 45°C within one month, and 0°C ~ 35°C between two and twelve months.
- The working environment of the battery pack is -20°C ~ 55°C for discharge, and 0°C ~ 55°C for charge.

14.5 SERVICE

ℹ IMPORTANT

Wait for all movement to stop before adjusting, cleaning or repairing. Repairs or maintenance requiring power should be performed by trained maintenance personnel only. Read and observe safety warnings in front of manual.

ℹ IMPORTANT

Repairs or maintenance requiring power should be performed by trained maintenance personnel only.

- Park the mower on level ground. Make sure that steering control levers are in the neutral position, and that the deck blades switch (PTO) is in “OFF” position. Raise deck, remove the key fob and disconnect battery cables (P+) in battery box compartment.
- Any maintenance operation that requires the removal of safety covers must be performed by a trained service technician.
- Before working on or under the deck, make certain the key fob is removed and deck blades switch (PTO) cannot be accidentally started and disconnect battery cables (P+) in battery box compartment.
- Use a stick or similar instrument to clean under the mower, making sure that no part of the body -- especially arms and hands -- is under mower.
- Keep your machine clean and remove any deposits of trash and clippings.
- Keep battery compartment, deck and operator’s station clean of accumulated trash, grass clippings, and other debris.
- Clean battery compartment, drive motor compartment, mower deck, etc., of all dirt and debris. To clean, use only compressed air. DO NOT use water, solvents, hard cleaners or abrasives.
- Always wear adequate eye protection when servicing the batteries or when grinding mower blades and removing accumulated debris. Never attempt to make any adjustments or repairs to the mower’s drive system, mower deck or any attachment while the traction drive system is running. Repairs or maintenance requiring power should be performed by trained maintenance personnel only.
- Never work under the machine or attachment unless it is safely supported with jack stands. Make certain machine is secure when it is raised and placed on the jack stands.
- The jack stands should not allow the machine to move when the traction drive system is running and the drive wheels are rotating. Use only certified jack stands. Use only appropriate jack stands, with a minimum weight rating of 2000 pounds (907.2 kg) to block the unit up. Use in pairs only. Follow the instructions supplied with the vehicle stands.
- Do not touch hot parts of machine.
- Keep nuts and bolts tight, especially the blade attachment bolts. Keep equipment in good working condition.
- Never tamper with safety devices. Check their proper operation regularly.
- Press push button to turn the mower OFF, remove the key fob before unclogging the discharge chute.
- Never clear the discharge chute with the machine running. Press push button to turn the mower OFF, remove the key fob and be sure the blades have stopped before cleaning. Use a stick to clear a plugged discharge area. Never use your hand!
- Stop unit and allow blades to stop before unclogging chute. Grass collection system components are subject to wear, damage and deterioration, which could expose moving parts or allow objects to be thrown. Frequently check components and replace with manufacturer’s recommended parts, when necessary.
- Exercise caution when working under the deck as the mower blades are extremely sharp. Wear gloves and use extra caution when servicing them.
- Use only genuine greenworkscommercial Mower parts to ensure that original standards are maintained.
- Always disconnect batteries when transporting unit. Keep unit free of grass clippings, leaves and other debris.

15 TRANSPORTATION AND STORAGE

15.1 TRANSPORTING THE LITHIUM-ION BATTERIES

Contact the appropriate government body in Australia for detailed regulations on transportation of your batteries or the machine with the batteries equipped. For detailed information on shipping a battery, contact your Authorized Service Dealer.

15.2 TRANSPORTING THE MACHINE

⚠ WARNING

Do not tow this machine, it may cause damage to the drive system.

⚠ WARNING

Use care when loading or unloading the mower onto a trailer. Ensure the cutting deck is raised to the highest position so that it is not caught on the ramp. The wheels on the mower can go off the ramp or trailer, causing the mower to pivot or tip over, and result in a crush hazard that can cause death or serious personal injury.

1. Park the mower on a level surface.
2. Raise the cutting deck to the highest position.
3. Position and secure ramp to the trailer according to manufacturer's instructions.

ℹ NOTE

We recommend you use one full width loading ramp that is at least 0.3 m. wider than the mower to minimize the risk of the mower's wheels going off the side of the ramp.

4. Slowly drive the mower onto the ramp and into the trailer.
5. Lower mower deck completely.
6. Set the parking brake.
7. Turn off mower and remove key.
8. Secure the mower as needed using straps or cables to prevent movement during transport.

⚠ WARNING

To avoid accidental starting or movement that could result in serious personal injury, always remove the start key and set the parking brake when transporting the mower.

15.2.1 MOVING A NON-FUNCTIONING MACHINE

⚠ CAUTION

The machine does not have brakes when the transmission is disengaged. It will roll uncontrolled, possibly causing injury.

If manual pushing is needed

1. Disengage the PTO and push the steering control levers outward to the PARK position.
2. Press push button to turn the mower OFF. Remove the key fob, and wait for all moving parts to stop before leaving the operating position
3. Unlock the neutral bypass lever(s) to release drive brakes.
4. Move the machine to the desired location.

⚠ CAUTION

Do not move the machine faster than 8km/h (5 mph).

5. Immediately after moving the machine, engage the transmission for operation.

15.2.2 NEUTRAL BYPASS LEVER

If manual pushing is needed

1. Locate the neutral bypass levers on both sides at the rear of the mower.
2. Pull the neutral bypass lever down to disengage the drive brake.
3. Pull the neutral bypass lever to the original position when in normal use.

⚠ WARNING

Never drive mower with the neutral bypass engaged. Always return the neutral bypass to the original position before driving! Failure to do so could cause serious damage to your mower and void mower warranty!

⚠ WARNING

Never pull the neutral bypass lever when the machine is working on the slope!

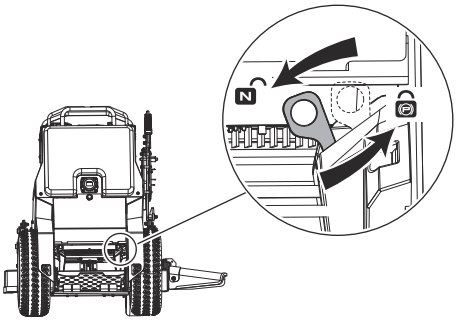

15.3 CLEANING AND STORAGE

15.3.1 CLEAN THE MACHINE

- Remove any build-up of grass and leaves on or around the motor cover (Do not use water from a high-pressure gun to flush the motor).
- Occasionally wipe the mower clean with a dry cloth.
- If debris builds up on the underside of the mower during use, stop the motor, turn off the machine, and scrape it clean using an appropriate tool.

15.3.2 STORE THE MACHINE

The following steps should be taken in order to prepare the machine for storage.

- Clean the machine as described in the previous section.
- Inspect the blade and replace it or sharpen it, if required (refer to the Maintenance section).
- Do not store the machine next to corrosive materials, such as fertilizer or rock salt.
- Keep the machine out of the reach of children.
- Do not cover the machine with a solid plastic sheet. Plastic coverings trap moisture around the machine, which causes rust and corrosion.
- Check thoroughly for any worn or damaged parts that need replacing and order them from your dealer.
- Please contact sevice center to thoroughly lubricate machine.
- Fully charge and service the batteries.
- Do not deflate tires.
- The machine should be stored in a well-ventilated, clean and dry place as the battery charger cannot be used in a wet environment.
    - Always keep the batteries fully charged. It is especially important to prevent battery damage when the temperature is below 32°F (0°C).
    - Attach the charger adapter to the charging port and the batteries per the Charging Adapter section in the Electrical System section.

- Plug the charger into a proper electrical outlet. Refer to Battery Charger, Battery Charging and Charging Recommendations portions of the Electrical System section for more details on using the charger and charging the batteries.
- To maximize battery life it is best to fully charge batteries shortly after each use.

16 TROUBLESHOOTING

PROBLEM	POSSIBLE CAUSE	SOLUTION
If error pattern are showing on the digital display.	Numerous.	Refer to Digital display in the section of this manual.
		Contact your greenworkscommercial dealer.
There is abnormal vibration.	The cutting blade(s) is/ are bent or unbalanced.	Install new cutting blade(s).
	A blade mounting bolt is loose.	Tighten the blade mounting bolt.
	Numerous.	Contact your greenworkscommercial dealer.
Uneven cutting height.	The blade(s) are not sharp.	Sharpen the blades.
	A cutting blade(s) is/are bent.	Install new cutting blade(s).
	The deck is not level.	Level the deck per the Deck leveling and height adjustment section of the parts manual.
	An anti-scalp wheel is not set correctly.	Adjust the height of the anti-scalp wheel.
	The underside of the deck is dirty.	Clean the underside of the deck.
	Tires improperly inflated.	Adjust air pressure and ensure even pressure between tines.
	A blade spindle is bent.	Contact your greenworkscommercial dealer
Mower will not start.	Key fob is not in place.	Check that key fob is in place.
	Battery is not charged.	Check battery connection in back battery compartment. Make sure the battery is charged
	Circuit breakers are tripped.	Check to see that ALL circuit breakers are not tripped.

17 TECHNICAL DATA

Model No.		CZ32S8X	CZ36S8X
Gross vehicle weight		401 kg	419 kg
Length		166.6 cm	166.6 cm
Height		122.2 cm	122.2 cm
Width (with discharge)		119.4 cm	129.5 cm
Deck width		81.3 cm	91.4 cm
Forward speed	Stand on the platform	0-16 km/h MAX	0-16 km/h MAX
	Stand on the ground	0-8 km/h MAX	0-8 km/h MAX
Mowing speed	Stand on the platform	0-13 km/h MAX	0-13 km/h MAX
	Stand on the ground	0-6 km/h MAX	0-6 km/h MAX
Reverse speed	Stand on the platform	0-6 km/h MAX	0-6 km/h MAX
	Stand on the ground	0-4 km/h MAX	0-4 km/h MAX
Cutting height range		2.5 cm - 12.7 cm	2.5 cm - 12.7 cm

The recommended battery pack storage condition:

storage temperature (within 4 weeks)	-20°C ~ 45°C
storage temperature (4 weeks to 52weeks)	0°C ~ 35°C
storage humidity ≤70%	≤70%
storage SOC	40%-50% (76.8V-79V)
routine maintenance	at least one charge-discharge cycle half a year

18 LIMITED WARRANTY

18.1 WHAT IS COVERED BY THIS WARRANTY

greenworkscommercial makes the following warranty to the original purchaser(“Owner”) only - warranty is non-transferable:

A. Residential Use: greenworkscommercial product used for normal residential purposes* are warranted for five (5) years or 2,000 hours total usage (whichever comes first) from date of purchase on all materials and workmanship of chassis, deck and batteries. Consumables such as tires and blades are warrantied for thirty (30) days from the date of purchase. If the Owner discovers within this warranty period a defect in materials or workmanship:

- Owner must promptly notify greenworkscommercial or an authorized dealer in writing or via email, phone call, app or in person of the defect. In no event shall such notification be received by greenworkscommercial, or an authorized dealer, later than five (5) years from the date of purchase.
- Within a reasonable time after such notification, and verification of warrantable defect; greenworkscommercial will correct any defect in material or workmanship on the greenworkscommercial product by, at its option, repairing or replacing part(s) with either new or used replacement parts.
- Such repair, including parts and labor, shall be at the expense of greenworkscommercial to the original Owner only.

B. Commercial Use: greenworkscommercial product used for commercial and institutional use are warranted for five (5) years or 2,000 hours total usage (whichever comes first) from date of purchase on all materials and workmanship of chassis, deck, and batteries. Consumables (including but not limited to tires and blades) are warrantied for thirty (30) days from the date of purchase. If the Owner discovers within this warranty period a defect in materials or workmanship:

- Owner must promptly notify greenworkscommercial or an authorized dealer in writing, via email, phone call, app or in person of the defect. In no event shall such notification be received by greenworkscommercial, or an authorized dealer, later than five (5) years from the date of purchase.
- Within a reasonable time after such notification and verification of warrantable defect greenworkscommercial will correct any defect in material or workmanship on the greenworkscommercial product by, at its option, repairing or replacing part(s) with either new or used replacement parts.
- Such repair, including parts and labor, shall be at the expense of greenworkscommercial to the original Owner (commercial) only.

ℹ NOTE

Failure to properly maintain batteries and keep them fully charged will reduce battery life and will void the battery warranty. The provisions of this limited warranty shall not apply to failure due to:

- Abuse or neglect such as: water damage, loose wiring or rusted or corroded hardware.
- Lack of proper maintenance; damage caused by improper installation of the battery; neglect, breakage, exposure to extreme temperature conditions including but not limited to freezing temperatures, hot temperatures, proximity to heat sources including warmers or fire, exposure to water or other substances, wreckage, operation of the battery in an overcharged or uncharged condition.
- A battery charged by systems other than the original equipment type battery charger.

Footnote: **" Normal residential purposes", as used herein, means use of Product on same lot as your home. Use at more than one location is considered commercial use, after which the commercial use warranty would apply.*

18.2 WHO MUST PERFORM THE WARRANTY SERVICE

All warranty service shall be performed by a greenworkscommercial authorized dealer or greenworkscommercial authorized service technician. Service calls and/or transportation expense of the product to and from the authorized dealer, for warranty work, will be paid by the owner of the product. For warranty service, contact an authorized dealer.

18.3 WHAT IS NOT COVERED BY THIS WARRANTY

greenworkscommercial does not warranty:

- Repairs made by unauthorized persons.
- Damage caused by use of the greenworkscommercial product for purposes other than those for which it was designed.
- Damages caused by disasters such as fire, flood, wind, and lightening.
- Damages caused by neglect, abuse, abnormal use, improper or unreasonable use, accident, negligence, or misuse such as water damage.
- Repairs or replacement resulting from the use of unauthorized parts, accessories, or attachments.
- Repairs or replacement as the result if any alterations or modifications, in the determination of greenworkscommercial, which adversely affects the operation, performance or durability of the equipment.
- Products, components, or parts not manufactured by greenworkscommercial.
- Products that have had their identification altered, including but not limited to serial numbers removed and/or made illegible.
- Depreciation or damage caused by normal wear, lack of reasonable and proper maintenance, failure to follow the product's operator manual operating, maintenance and adjustment instructions or other operational instructions provided by greenworkscommercial.
- Normal maintenance parts and service including, but not limited to, lubricants, tune-up parts, blades, blade sharpening, bearings, brake or steering adjustments.
- Products with unapproved programming for that product including alterations to parameters, aftermarket programming or adjustments, or any unapproved modification to components, electronics, or software.

18.4 DISCLAIMER OF WARRANTY

The foregoing warranties are in lieu of all other warranties, expressed or implied, including but not limited to the implied warranties of merchantability and fitness for a particular purpose. However, if the greenworkscommercial Product is purchased as a consumer product, any implied warranty of merchantability or fitness for a particular purpose is limited to the duration of this limited warranty. Some states do not allow limitations on how long an implied

warranty lasts, so the above limitation may not apply to you. This warranty gives you specific legal rights, and you may also have other rights which vary from state to state.

18.5 LIMITATION OF REMEDIES

In no case shall greenworkscommercial be liable for any special, incidental, or consequential damages based upon breach of warranty, breach of contract, negligence, strict liability in tort, or any other legal theory. Such damages include, but are not limited to:

- Loss of profits
- Loss of savings or revenue
- Loss of use of the greenworkscommercial Product or any associated equipment
- Cost of capital
- Cost of any substitute equipment, facilities, services or downtime
- The claims of third parties, including customers, and injury to property

18.6 TIME LIMIT

Unless State law determines otherwise:

Any action for breach of warranty must be commenced within five (5) years or sixty (60) months from the date of purchase in a residential and/or commercial application.

In the event the date of manufacture exceeds a reasonable timeframe preceding first customer purchase, greenworkscommercial warranty may be subject to additional limitations.

18.7 NO OTHER WARRANTIES

This agreement is understood to be the complete and exclusive agreement between the parties, superseding all prior agreements, oral or written, and all other communications between the parties relating to the subject matter of this agreement.

18.8 OWNER'S RESPONSIBILITY

You must maintain your greenworkscommercial Product following the maintenance procedures described in your operator manual. Such routine maintenance, whether performed by a dealer or by you, is at your expense.

This machine, like any other powered equipment, is potentially dangerous unless properly operated. Any operator must be cautious and always keep safety in mind. Any operator, prior to using the greenworkscommercial Product, should thoroughly familiarize themself with the operator manual regarding operation and safety of the machine, as well as all safety warnings on the machine itself.

18.9 ALLOCATION OF RISKS

This agreement allocates the risks of product failure between greenworkscommercial and the Owner. This allocation is recognized by both parties and is reflected in the price of the goods.

18.10 WARRANTY REGISTRATION

Unless State law determines otherwise:

1. Owners must register the unit with greenworkscommercial within ten (10) days following date of purchase.
2. Registration can be completed by filling out the Warranty Registration Form, which is provided in the operator manual.
3. Registration can also be completed by using forms online at www.greenworksaustralia.com or by using the app and providing proof of purchase (receipt including date of purchase).

18.11 WARRANTY REGISTRATION FORM

greenworkscommercial Mower Warranty Registration & Manual(s) Received		
Name:		
Address:		
City:	State:	Zip Code:
Country:	Phone Number:	
Serial Number:	Model:	
Attachments:		
Purchase Date:	Purchased From:	

www.greenworksaustralia.com

greenworks COMMERCIAL

P0805062-00 Rev B